# PLANS FOR CONSTRUCTION

# INTERNAL SERVICES DEPARTMENT
## REEDLEY RADIO TOWER AND EQUIPMENT SHELTER
## 17626 E. MANNING AVENUE REEDLEY, CA

ENGINEER'S CERTIFICATION:

THIS PLAN WILL NOT IMPOSE A DRAINAGE, GRADING OR FLOODING HAZARD TO ITSELF AND SURROUNDING PROPERTIES.

JOSEPH HARRELL, P.E. — DATE: 6/18/2024

LICENSE NO. CE 80424 — EXPIRATION: 3/31/2025

| | | | |
|---|---|---|---|
| Nathan Magsig | Chairman | 5th | District |
| Ernest Buddy Mendes | Vice Chairman | 4th | District |
| Brian Pacheco | | 1st | District |
| Steve Brandau | | 2nd | District |
| Sal Quintero | | 3rd | District |

Paul Nerland
County Administrative Officer

APPROVED _____

Steven E. White, Director
Department of Public Works and Planning

| DIVISION | DESIGN | CONST | ISD |
|---|---|---|---|
| SIGNATURE | | | Bobby Bloyed |
| DATE | 6/18/2024 | 6/17/2024 | 5/23/2024 |

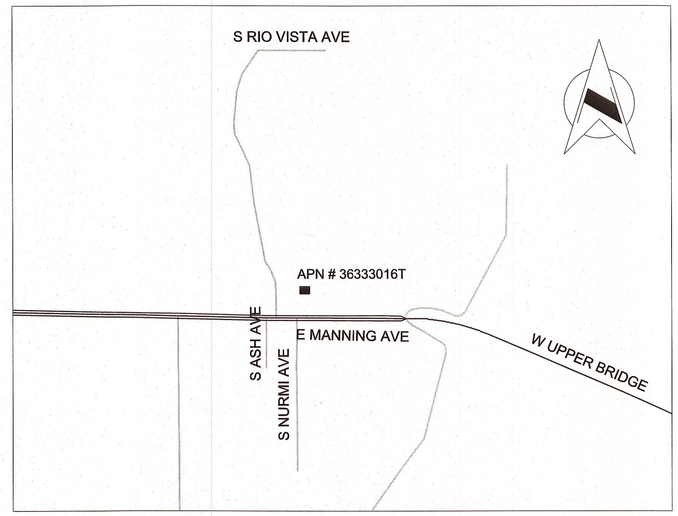


LOCATION MAP
SCALE: N.T.S.

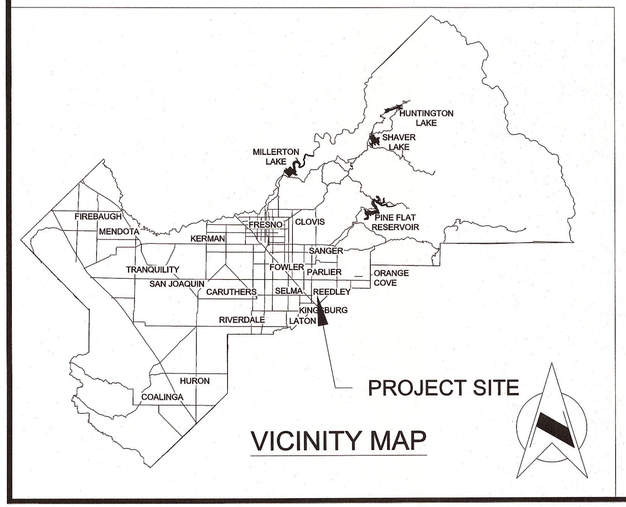


VICINITY MAP

## SCOPE OF WORK

THE PROJECT CONSISTS OF CONSTRUCTING A 1,012 SQFT. COMMUNICATION EQUIPMENT SHELTER.

## BUILDING DATA

| | |
|---|---|
| USE | : EQUIPMENT SHELTER |
| ZONING | : AL-20 |
| OCCUPANCY | : U |
| CONSTRUCTION TYPE | : VB |
| ALLOWABLE HEIGHT (STORY) | : 1 |
| ALLOWABLE AREA | : 5,500 SQFT. |
| ACTUAL HEIGHT | : 1 |
| ACTUAL AREA | : 1,012 SQFT. |

## INDEX



CALIFORNIA CONTRACTOR'S LICENSES REQUIRED FOR THIS PROJECT

CLASS B, GENERAL BUILDING CONTRACTOR

| DRAWING NO. | ROAD NO. | BRIDGE NO. | FISCAL YR. | SHEET NO. | TOTAL |
|---|---|---|---|---|---|
| 11328 | N/A | N/A | 24/25 | ---- | 35 |

CONTRACT NO. 24-S-04

RECORD DRAWING

DATE ADOPTED

CONTRACTOR

NAME

ADDRESS

CITY STATE ZIP

DATE AWARDED

DATE STARTED

DATE COMPLETED

RESIDENT ENGINEER

NAME SIGNATURE

NAME SIGNATURE

THE COUNTY OF FRESNO 1856

## DEPARTMENT OF PUBLIC WORKS AND PLANNING


# GRADING PLAN

**SCALE : 1" = 10'**

## GENERAL CONSTRUCTION NOTES:

1. ALL UTILITY MANHOLES/BOXES AFFECTED BY THIS PROJECT SHALL BE ADJUSTED TO GRADE AS NECESSARY AND INCLUDED IN THIS WORK.
2. ALL WORK SHALL BE DONE IN ACCORDANCE WITH THE COUNTY STANDARD DRAWINGS AND SPECIFICATIONS
3. BEFORE COMMENCING WORK, THE CONTRACTOR SHALL NOTIFY ALL UTILITY AUTHORITIES OR UTILITY COMPANIES HAVING POSSIBLE INTEREST IN THE WORK OF THE CONTRACTOR'S INTENTION TO EXCAVATE PROXIMATE TO EXISTING FACILITIES AND THE CONTRACTOR SHALL VERIFY THE LOCATION OF ANY UTILITIES IN THE WORK AREA. THE CONTRACTOR SHALL NOTIFY U.S.A. TWO (2) DAYS PRIOR TO BEGINNING ANY EXCAVATION.
4. RELATIVE COMPACTION TESTS MUST BE WITHIN TWO PERCENTAGE POINTS OF OPTIMUM MOISTURE CONTENT TO BE CONSIDERED AS PASSING.
5. THE COST OF ALL REPEAT TESTING REQUIRED FOR ACCEPTANCE OF WORK SHALL BE FULLY BORNE BY THE CONTRACTOR.
6. ALL WATER MAIN VALVES (CAP AND LID) SHALL BE ADJUSTED TO GRADE.
7. ADJUSTMENT TO BUILDING PAD ELEVATIONS OR PARKING LOT GRADES TO ACHIEVE EARTHWORK BALANCE SHALL BE MADE ONLY WITH APPROVAL OF THE ENGINEER.
8. ANY DIRT OR DEBRIS TRACKED ONTO ANY CITY/COUNTY STREET FROM THIS PROJECT SHALL BE CLEANED OFF AT THE END OF EACH WORKING DAY TO THE SATISFACTION OF THE CITY/COUNTY.
9. DURING THE SITE CONSTRUCTION. AND PUBLIC STREETS FRONTING THE PROJECT SHALL BE KEPT CLEAR OF ANY CONSTRUCTION OR LANDSCAPING DEBRIS AND SHALL NOT BE USED AS A STORAGE AREA FOR EQUIPMENT, MATERIALS, OR OTHER ITEMS.
10. ANY EXISTING SECTION CORNERS OR PROPERTY CORNER MONUMENTS DAMAGE BY THIS DEVELOPMENT SHALL BE RESET TO THE SATISFACTION OF THE CITY/COUNTY ENGINEER. A LICENSED LAND SURVEYOR OR CIVIL ENGINEER LICENSED TO PERFORM LAND SURVEYING HALL CERTIFY THE PLACEMENT OF ALL REQUIRED MONUMENTATION PRIOR TO FINAL ACCEPTANCE. BRASS CAPS REQUIRED TO BE PROVIDED FOR REPLACEMENT OF EXISTING MONUMENTS SHALL BE DONE SOLELY AT THE CONTRACTORS EXPENSE.
11. NOT USED.
12. THE DEVELOPER SHALL COMPLY WITH ALL APPLICABLE REQUIREMENTS OF THE CALIFORNIA CODE OF REGULATIONS, COUNTY ORDINANCES, STATE REGULATIONS, NATIONALLY RECOGNIZED CODES AND STANDARDS , AND ADOPTED POLICIES OF THE FIRE DEPARTMENT.
13. ALL GRADING SHALL CONFORM TO THE CALIFORNIA BUILDING CODE APPENDIX J, C.B.C. 2022.
14. MAXIMUM CUT OR FILL SLOPES SHALL BE 2:1 OR AS SHOWN. ALL GRADING SHALL BE DONE UNDER THE SUPERVISION OF A REGISTERED SOILS ENGINEER. FILL LAYERS SHALL NOT EXCEED 8 INCHES IN THICKNESS.
15. IT IS THE CONTRACTOR'S RESPONSIBILITY FOR THE LOCATION AND PROTECTION OF ALL UTILITIES.
16. THE DEVELOPER AND/OR CONTRACTOR SHALL NOTIFY ALL UTILITY COMPANIES FORTY-EIGHT (48) HOURS PRIOR TO GRADING AND/OR DIGGING: 811 IS THE UNDERGROUND SERVICE ALERT NUMBER.
17. CONTRACTOR TO PROVIDE THE COUNTY WITH AS-GRADED PLANS. PLANS ARE TO BE SUBMITTED UPON COMPLETION OF PROJECT AND PRIOR TO ACCEPTANCE.
18. ALL SITE WORK SHALL BE IN CONFORMANCE WITH TITLE 24 OF CALIFORNIA ADMINISTRATIVE CODE.
19. THE TYPES, LOCATIONS, SIZES, AND/OR DEPTHS OF EXISTING UNDERGROUND UTILITIES AS SHOWN ON THE IMPROVEMENT PLANS WERE OBTAINED FROM SOURCES OF VARYING RELIABILITY. THE CONTRACTOR IS CAUTIONED THAT ONLY ACTUAL EXCAVATION WILL REVEAL THE TYPES, EXTENT, SIZES, LOCATIONS AND DEPTHS OF SUCH UNDERGROUND UTILITIES. (A REASONABLE EFFORT HAS BEEN MADE TO LOCATE AND DELINEATE ALL KNOWN UNDERGROUND UTILITIES). HOWEVER, THE ENGINEER CAN ASSUME NO RESPONSIBILITY FOR THE COMPLETENESS OR ACCURACY OF THE DELINEATION OF SUCH UNDERGROUND UTILITIES WHICH MAY BE ENCOUNTERED, BUT WHICH ARE NOT SHOWN ON THESE DRAWINGS.
20. THE UNDERGROUND CONTRACTOR SHALL SET HIS STRING OR WIRE THROUGH AT LEAST THREE GRADE STAKES TO VERIFY THE GRADE. IF THE STAKES DO NOT PRODUCE A UNIFORM GRADE, NOTIFY ENGINEER IMMEDIATELY AND HAVE THE GRADES CHECKED PRIOR TO TRENCHING.
21. ALL UTILITY STRUCTURES INCLUDING, BUT NOT LIMITED TO MANHOLES, CATCH BASINS, WATER VALVES, FIRE HYDRANTS, TELEPHONE AND ELECTRIC VAULTS AND PULL BOXES THAT LIE WITHIN AREAS AFFECTED BY WORK ON THIS PROJECT SHALL BE ADJUSTED TO GRADE BY THE CONTRACTOR OR THE RESPECTIVE UTILITY COMPANY. THE CONTRACTOR IS RESPONSIBLE TO AFFECT COORDINATION.
22. ALL WORK SHALL BE PERFORMED IN ACCORDANCE WITH APPLICABLE O.S.H.A. REGULATIONS.
23. CONSTRUCTION CONTRACTOR AGREES THAT IN ACCORDANCE WITH GENERALLY ACCEPTED CONSTRUCTION PRACTICES, CONSTRUCTION CONTRACTOR WILL BE REQUIRED TO ASSUME SOLE AND COMPLETE RESPONSIBILITY FOR JOB SITE CONDITIONS DURING THE COURSE OF CONSTRUCTION OF THE PROJECT. INCLUDING SAFETY OF ALL PERSONS AND PROPERTY; THAT THIS REQUIREMENT SHALL BE MADE TO APPLY CONTINUOUSLY AND NOT BE LIMITED TO NORMAL WORKING HOURS, AND CONSTRUCTION CONTRACTOR FURTHER AGREES TO DEFEND, INDEMNIFY AND HOLD DESIGN PROFESSIONAL HARMLESS FROM ANY AND ALL LIABILITY REAL OR ALLEGED, IN CONNECTION WITH THE PERFORMANCE OF WORK ON THIS PROJECT, EXCEPTING LIABILITY ARISING FROM THE SOLE NEGLIGENCE OF DESIGN PROFESSIONAL.
24. UNDERGROUND UTILITY TRENCH BACKFILL TO BE TESTED AND WRITTEN REPORT SUBMITTED TO THE BUILDING OFFICIAL, BY THE SOILS ENGINEER.
25. ALL GRADING AND EROSION CONTROL SHALL BE DONE IN CONFORMANCE WITH CURRENT STATE BMP'S.
26. PRIOR TO EXCAVATION, CONTRACTOR SHALL LOCATE ALL EXISTING UNDERGROUND UTILITIES. CALL 811 TO HAVE UTILITIES LOCATED AND MARKED.
27. DUST CONTROL SHALL CONFORM TO THE PROVISION IN SECTION 10 OF THE STATE STANDARD SPECIFICATIONS.
28. CONTRACTOR SHALL PROVIDE A MINIMUM OF 48 HOURS NOTICE IN ADVANCE OF ANY REQUIRED INSPECTION. ANY TEMPORARY SUSPENSION OF WORK OR RETURNING TO WORK FOR ANY REASON WILL BE CAUSE FOR THE CONTRACTOR TO TELEPHONE THE PUBLIC WORKS DEPARTMENT.
29. CONTRACTOR SHALL SEE TO IT THAT TRUCKS LEAVING THE SITE SHALL DO SO IN SUCH A MANNER THAT MUD AND EARTH WILL NOT BE DEPOSITED ON ADJACENT STREET PAVEMENTS. ANY MUD OR EARTH DEPOSITED ON STREET PAVEMENT SHALL BE PROMPTLY REMOVE BY THIS CONTRACTOR.
30. ALL PORTLAND CEMENT CONCRETE TO BE 3500 PSI UNLESS NOTED OTHERWISE.
31. CONTRACTOR SHALL REPLACE AND/OR REPAIR ALL DAMAGES AFFECTED BY CONSTRUCTION ON EXISTING ADJACENT OFF-SITE IMPROVEMENTS TO THE SATISFACTION OF THE COUNTY MAINTENANCE AND OPERATION DIVISION.

## LEGEND:

| | |
|---|---|
| 336.70 | EXISTING SURFACE GRADE |
| 335.70 | NEW FINISHED GRADE |
| C | CONCRETE |
| FL | FLOWLINE |
| FG | FINISHED GRADE |
| FF | FINISH FLOOR |
| D | DIRT |
| 1% | DRAINAGE DIRECTION AND SLOPE |
| | DIRECTION OF FLOW |
| | SWALE |
| | GRADE BREAK |

Know what's **below.** **Call** before you dig.

| | DATE | RECORD DRAWING | |
|---|---|---|---|
| DESIGNED: CZ | 4-15-23 | RESIDENT ENGINEER | DATE |
| DRAWN: CZ | 4-15-23 | | |
| CHECKED: JH | 5-2-23 | | |

FOR RIGHT OF WAY DATA AND ACCURATE ACCESS DETERMINATION, SEE DOCUMENTS IN THE DEPARTMENT OF PUBLIC WORKS AND PLANNING.

SCALE
HORIZ 0 10' 20'
VERT 0 1' 2'

SUPERVISING ENGINEER — DATE 6/20/2024

REGISTERED PROFESSIONAL ENGINEER JOSEPH C. HARRIEL No. C80424 CIVIL STATE OF CALIFORNIA

PROJECT

DEPARTMENT OF INTERNAL SERVICES
REEDLEY RADIO TOWER EQUIPMENT SHELTER

THE COUNTY OF FRESNO

**GRADING PLAN**

DRAWING NO. **11328** SHEET NO. **G1** TOTAL **35**

## GENERAL NOTES :

1. THE GENERAL CONTRACTOR SHALL BE RESPONSIBLE FOR THE VERIFICATION OF ALL DIMENSIONS, GRADES, AND ALL OTHER CONDITIONS AND CORRELATE AT THE JOBSITE, AND REPORT ANY DISCREPANCIES TO THE DESIGNER FOR CLARIFICATION PRIOR TO COMMENCING ANY WORK.
2. THE GENERAL CONTRACTOR SHALL BE RESPONSIBLE FOR THE WORK AND THE OORDINATION OF ALL TRADES AND GOVERNING AGENCIES.
3. ALL CONSTRUCTION SHALL COMPLY WITH THE FOLLOWING CODES:
   THE 2022 EDITION OF THE CALIFORNIA BUILDING CODE.
   THE 2022 EDITION OF THE CALIFORNIA PLUMBING CODE.
   THE 2022 EDITION OF THE CALIFORNIA MECHANICAL CODE.
   THE 2022 EDITION OF THE CALIFORNIA ELECTRICAL CODE.
   THE 2022 EDITION OF THE CALIFORNIA ENERGY CODE.
   AND ALL ADOPTED ORDINANCES OF THE DISTRICT IN MENTION.
4. DRAWINGS ARE NOT TO BE SCALED. DIMENSIONS GOVERNS.
5. ALL MATERIALS, FIXTURES, EQUIPMENTS, AND ACCESSORIES SHALL BE INSTALLED IN ACCORDANCE WITH ALL GOVERNING REGULATIONS TO THE MANUFACTURER'S RECOMMENDED STANDARDS. PROVIDE ALL SUPPORTS, RACKING, REINFORCEMENT, OR OTHER PREPARATIONS REQUIRED TO RIGIDLY SECURE ALL ITEMS WORKING OR EVENT IMPOSED LOADS.
6. ALL OUTDOOR LIGHTING SHALL BE HOODED AND DIRECTED SO AS TO NOT SHINE TOWARDS ADJACENT PROPERTIES AND PUBLIC STREETS.
7. IN THE EVENT THAT CULTURAL RESOURCES ARE UNEARTHED DURING GROUND-DISTURBING ACTIVITIES, ALL WORK SHALL BE HALTED IN THE AREA OF THE FIND. AN ARCHEOLOGIST SHALL BE CALLED TO EVALUATE THE FINDINGS AND MAKE ANY NECESSARY MITIGATION RECOMMENDATIONS. IF HUMAN REMAINS ARE UNEARTHED DURING GROUND-DISTURBING ACTIVITIES, NO FURTHER DISTURBANCE IS TO OCCUR UNTIL THE FRESNO COUNTY SHERIFF-CORONER HAS MADE NECESSARY FINDINGS AS TO ORIGIN AND DISPOSITION. ALL NORMAL EVIDENCE PROCEDURES SHOULD BE FOLLOWED BY PHOTOS, REPORTS, VIDEO, ETC. IF SUCH REMAINS ARE DETERMINED TO BE NATIVE AMERICAN, THE SHERIFF-CORONER MUST NOTIFY THE NATIVE AMERICAN COMMISSION WITHIN 24 HOURS.
8. AN ENCROACHMENT PERMIT FROM ROAD MAINTENANCE AND OPERATIONS IS REQUIRED FOR ANY WORK PERFORMED WITHIN THE COUNTY ROAD RIGHT-OF-WAY.

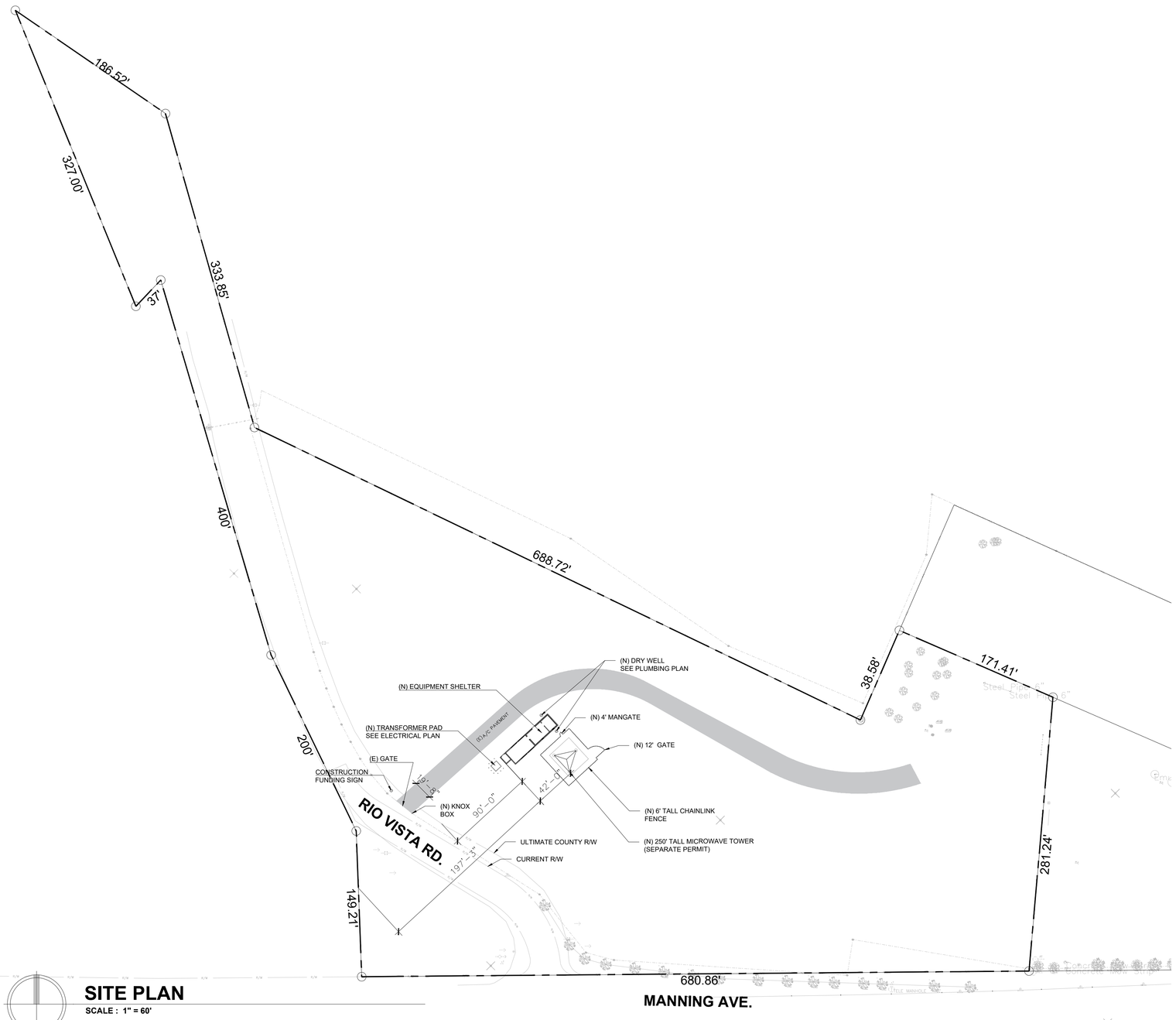


## SITE PLAN

**SCALE : 1" = 60'**

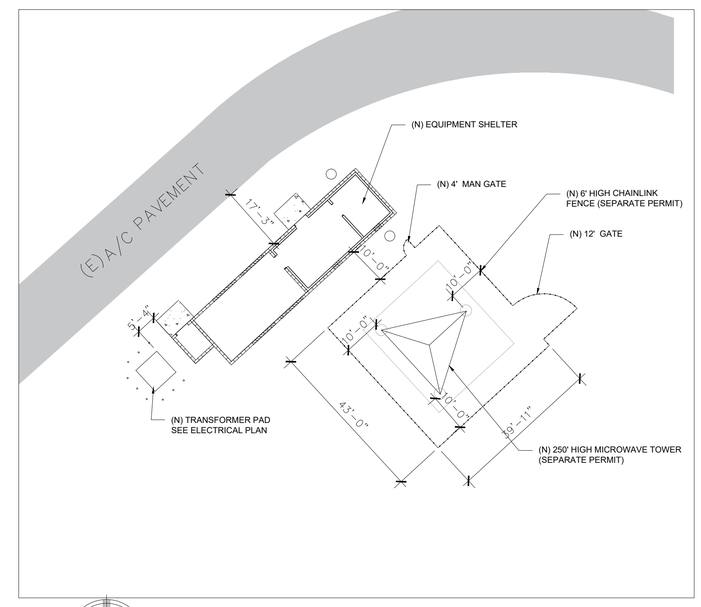


## ENLARGED PARTIAL SITE PLAN

**SCALE : 1" = 20'**

| | DATE | RECORD DRAWING | |
|---|---|---|---|
| DESIGNED: CZ | 4-15-23 | RESIDENT ENGINEER | DATE |
| DRAWN: CZ | 4-15-23 | | |
| CHECKED: JH | 5-2-23 | | |

FOR RIGHT OF WAY DATA AND ACCURATE ACCESS DETERMINATION, SEE DOCUMENTS IN THE DEPARTMENT OF PUBLIC WORKS AND PLANNING.

SCALE
HORIZ 0 10' 20'
VERT 0 1' 2'

SUPERVISING ENGINEER — DATE 6/20/2024

REGISTERED PROFESSIONAL ENGINEER JOSEPH C. HARRELL No. C80424 Exp.3/31/23 CIVIL STATE OF CALIFORNIA

PROJECT

DEPARTMENT OF INTERNAL SERVICES
REEDLEY RADIO TOWER EQUIPMENT SHELTER

THE COUNTY OF FRESNO

**SITE PLAN**

DRAWING NO. **11328** SHEET NO. **A1** TOTAL **35**

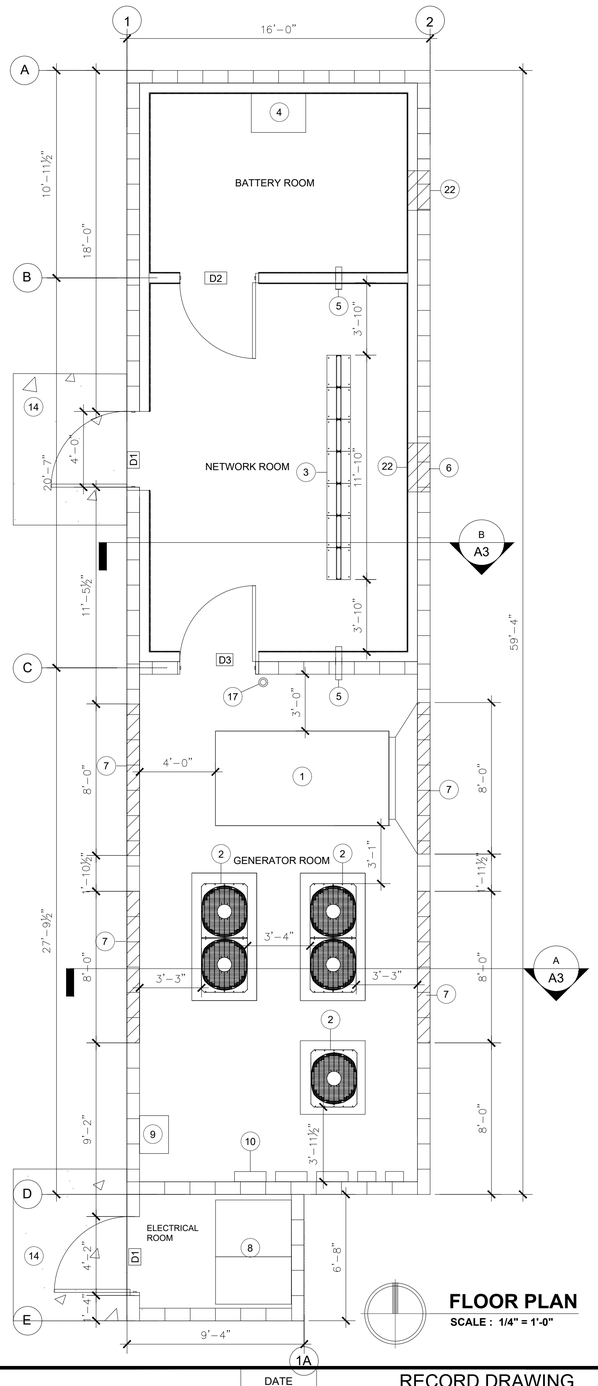


## FLOOR PLAN
SCALE : 1/4" = 1'-0"

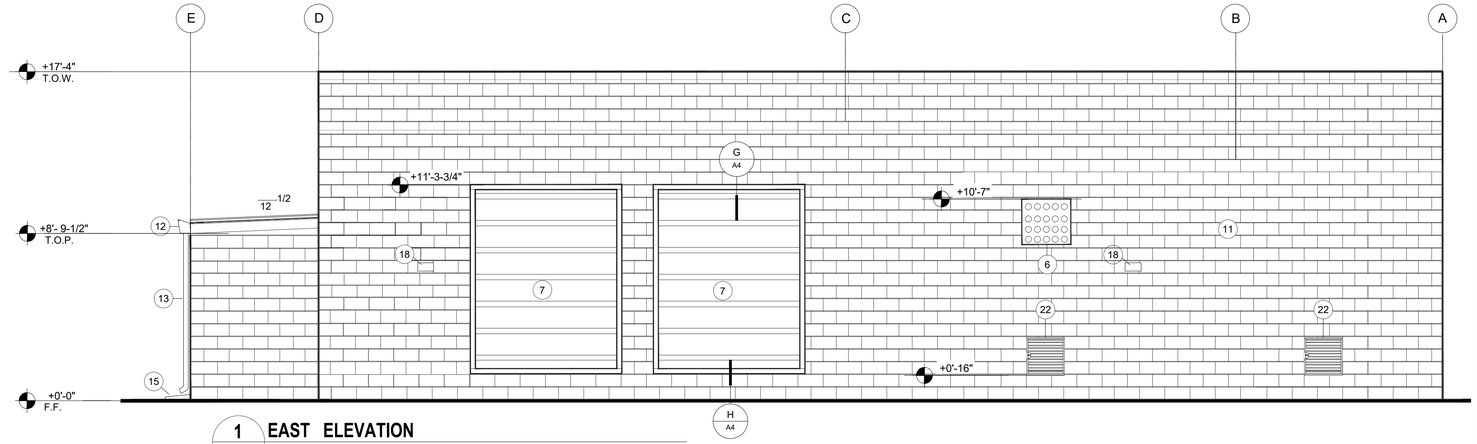


## 1 EAST ELEVATION
SCALE : 1/4" = 1'-0"

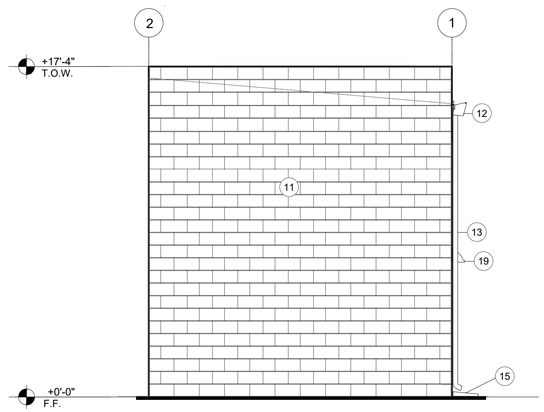


## 2 NORTH ELEVATION
SCALE : 1/4" = 1'-0"

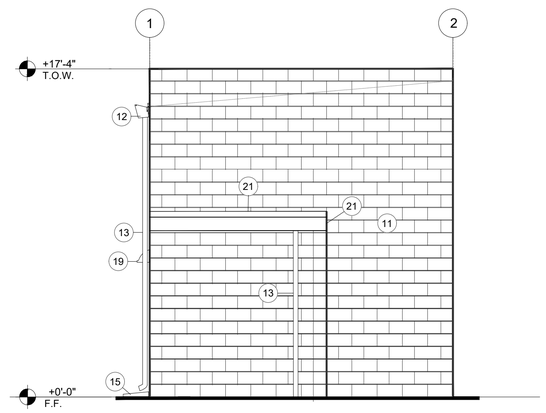


## 3 SOUTH ELEVATION
SCALE : 1/4" = 1'-0"

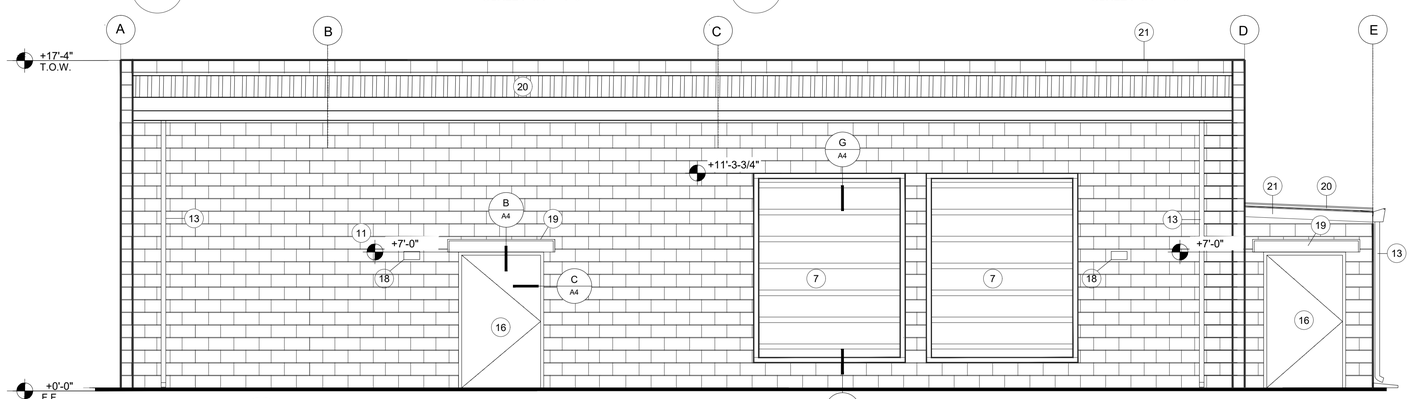


## 4 WEST ELEVATION
SCALE : 1/4" = 1'-0"

# KEY NOTES

1. EMERGENCY GENERATOR
2. OUTDOOR UNIT
3. EQUIPMENT RACK
4. BATTERY PLANT
5. PORT WALL PENETRATION
6. WALL PENETRATION TO TOWER
7. 8'W X 10'H METAL LOUVERS (TYP. OF 4) SEE MECHANICAL PLANS FOR SPECS.
8. UTILITY METER MAIN
9. AUTOMATIC TRANSFER SWITCH
10. ELECTRICAL PANELS (TYP.)
11. 8" X8"X16" SMOOTH FACE CMU BLOCK WALL - PAINTED COLOR TO BE SELECTED
12. RAIN GUTTER PRIME AND PAINT - COLOR TO BE SELECTED
13. RAIN WATER LEADER DOWNSPOUT BOOT, PRIME & PAINT - COLOR TO BE SELECTED
14. 4" CONCRETE LANDING (MAX. SLOPE = 2%
15. CONCRETE SPLASH BLOCK
16. SOLID METAL DOOR WITH METAL FRAME (SEE SCHEDULE ON SHEET A5)
17. PORTABLE FIRE EXTINGUISHER 3A40BC
18. WALL MOUNTED LIGHT FIXTURE - VERIFY MOUNTING HEIGHT (SEE ELECTRICAL PLANS)
19. RAIN DIVERTER
20. 24GA STANDING SEAM METAL ROOF DECK
21. PROVIDE 24 GA. METAL FLASHING AT PARAPET WALL AND ROOF INTERSECTIONS, AT GUTTERS, AND AROUND ROOF OPENINGS (TYP.)
22. RUSKIN ELC445 COMBINATION STATIONARY LOUVER WITH OPERABLE DAMPER.SEE MECHANICAL PLANS

TOW - TOP OF WALL
FF - FINISH FLOOR

| ROOM NAME | FLOOR | | WALLS | | | | | | | | CEILING | | |
|---|---|---|---|---|---|---|---|---|---|---|---|---|---|
| | | | NORTH | | EAST | | SOUTH | | WEST | | | | |
| | MAT | FIN | MAT | FIN | MAT | FIN | MAT | FIN | MAT | FIN | MAT | FIN | HT |
| GENERATOR ROOM | CONC | - | - | - | - | - | - | - | - | - | - | - | VAR |
| NETWORK ROOM | CONC | EP | GP | P | GP | P | GP | P | GP | P | GP | P | VAR |
| BATTERY ROOM | CONC | EP | GP | P | GP | P | GP | P | GP | P | GP | P | VAR |
| ELECTRICAL ROOM | CONC | - | - | - | - | - | - | - | - | - | - | - | VAR |

| | |
|---|---|
| P | COLOR : EXTRA WHITE-SEMI GLOSS ZERO VOC |
| CONC | CONCRETE |
| GP | GYPSUM BOARD |
| EP | EPOXY COATED WITH 4" HIGH COVE BASE |

# WALL LEGEND

EXTERIOR PERIMETER WALL:

8" SMOOTH FACE CMU BLOCK WALL WITH CLEAR PENETRATING SEALER ON THE EXTERIOR SIDE

8" SMOOTH FACE CMU BLOCK WALL WITH CLEAR PENETRATING SEALER ON THE EXTERIOR SIDE WITH 6" METAL STUDS @ 16" O.C. WITH $\frac{5}{8}$" GYPSUMBOARD PROVIDE R-19 BATT INSULATION TYP.

INTERIOR WALL:

8" SMOOTH FACE CMU BLOCK WALL TOP OF WALL FOLLOWS THE SLOPE OF THE UNDERSIDE OF THE ROOF RAFTER WITH 6" METAL STUDS @ 16" O.C. WITH $\frac{5}{8}$" GYPSUMBOARD ON OPPOSITE SIDE W/ R-19 BATT INSULATION

6" METAL STUDS @ 16" O.C. WITH $\frac{5}{8}$" GYPSUMBOARD ON EACH SIDE

| | DATE | RECORD DRAWING | DATE |
|---|---|---|---|
| DESIGNED: CZ | 4-15-23 | RESIDENT ENGINEER | |
| DRAWN: CZ | 4-15-23 | | |
| CHECKED: JH | 5-2-23 | | |

FOR RIGHT OF WAY DATA AND ACCURATE ACCESS DETERMINATION, SEE DOCUMENTS IN THE DEPARTMENT OF PUBLIC WORKS AND PLANNING.

SCALE
HORIZ 0 10' 20'
VERT 0 1' 2'

SUPERVISING ENGINEER — DATE 6/20/2024

REGISTERED PROFESSIONAL ENGINEER JOSEPH C. HARRELL No. C80424 CIVIL STATE OF CALIFORNIA

PROJECT
DEPARTMENT OF INTERNAL SERVICES
REEDLEY RADIO TOWER EQUIPMENT SHELTER

THE COUNTY OF FRESNO

# FLOOR PLAN - ELEVATIONS

DRAWING NO. 11328 SHEET NO. A2 TOTAL 35

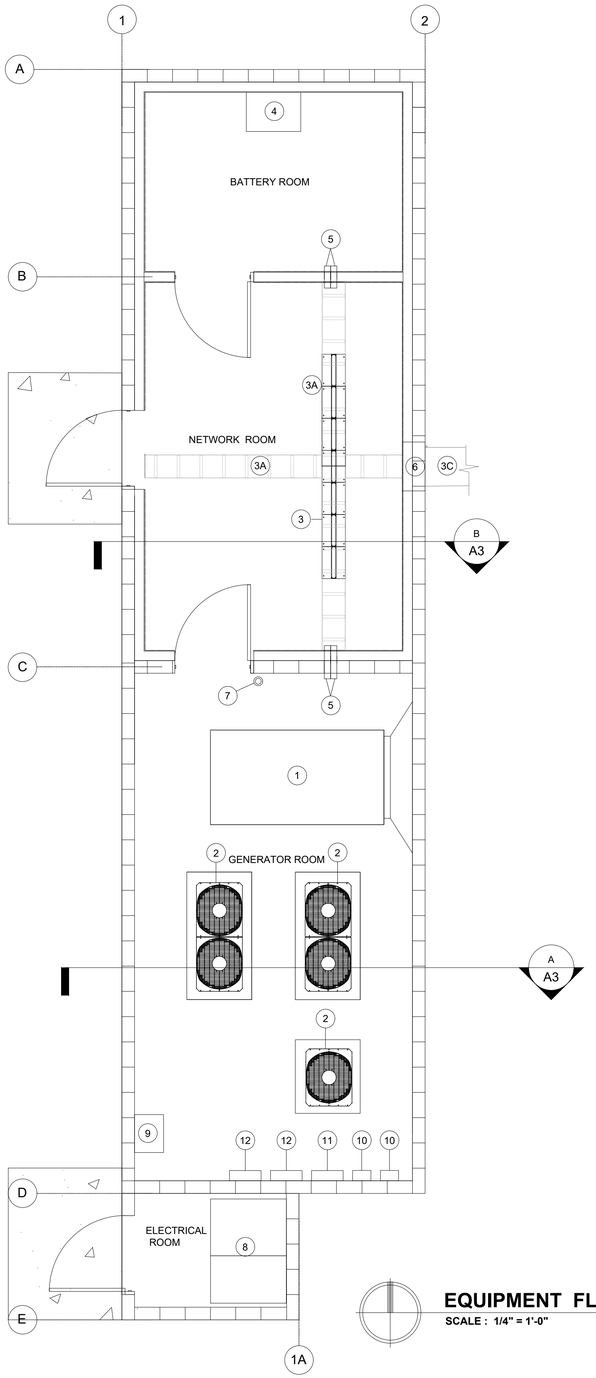


## EQUIPMENT FLOOR PLAN

**SCALE : 1/4" = 1'-0"**

## EQUIPMENT LIST

| EQUIPMENT NO. | EQUIPMENT NAME | QTY | REMARKS |
|---|---|---|---|
| 1 | Emergency Generator and accessories | 1 | Owner Supplied ; to be installed by Contractor ; See Generator Cut sheet under Supplemental Information |
| 2 | Outdoor Units | 3 | See Mechanical Plan- Sheet M4-0 |
| 3 | Cable Trays/Runway and assembly hardware | 6 | UL Listed ; 19" wide x 9'-8-1/2" high to comply to TELCO-Style standards<br>See Specifications |
| 3A | Equipment Racks and assembly hardware | 7 | UL Listed: Two(2) Top Angles - 19" wide x 7' high High Strength,<br>Lightweight Aluminum Construction ; Clear Finish Integrated<br>Grounding with built-in attachment point for a ground (earthing) connection<br>See Specifications |
| 3B | Ice Bridge Kits or Waveguide Bridge kits | 3 (verify) | 13'-4" H x 24"H x 10'L Buriable 2-Post Waveguide Bridge Kit |
| 4 | Battery Plant | 1 | Manufacturer : C&D Technologies MS ENDUR II or owner approved equal |
| 5 | Fire-Rated Pathway | 4 | Manufacturer : EZ-Path Series 44+Fire-rated Pathway EXP44s2 or Owner approved equal<br>See Specifications |
| 6 | 20 Port Entrance Panel and accessories | 1 | 28.8"H x 31"L with 4" entry diameter to be installed with at least (4) Firestop pillows and Firestop Foam to help create a fire, smoke and moisture barrier around cable and mixed penetrations |
| 7 | Portable Fire Extinguisher 3A40BC | 1 | |
| 8 | Utility Meter Main | 1 | See Electrical Plans and Specifications |
| 9 | Automatic Transfer Switch | 1 | See Electrical Plans and Specifications |
| 10 | Tower Strobe Controllers | | See Electrical Plans and Specifications |
| 11 | Panel | | See Electrical Plans and Specifications |
| 12 | IDU Panels | | See Electrical Plans and Specifications |

Notes :

All equipment in this list will be furnished and installed by the contractor except for Equipment #1
Contractor to submit Product Data for each equipment; See Specifications
See Floor Plan, Mechanical Plan and Electrical Plan for equipment not shown in this Sheet

| | DATE | RECORD DRAWING | |
|---|---|---|---|
| DESIGNED: CZ | 4-15-23 | RESIDENT ENGINEER | DATE |
| DRAWN: CZ | 4-15-23 | | |
| CHECKED: JH | 5-2-23 | | |

FOR RIGHT OF WAY DATA AND ACCURATE ACCESS DETERMINATION, SEE DOCUMENTS IN THE DEPARTMENT OF PUBLIC WORKS AND PLANNING.

SCALE

HORIZ 0 10' 20'
VERT 0 1' 2'

SUPERVISING ENGINEER

6/20/2024
DATE

REGISTERED PROFESSIONAL ENGINEER JOSEPH C. HARRELL No. C80424 CIVIL STATE OF CALIFORNIA

PROJECT

DEPARTMENT OF INTERNAL SERVICES
REEDLEY RADIO TOWER EQUIPMENT SHELTER

THE COUNTY OF FRESNO

# EQUIPMENT PLAN

DRAWING NO. **11328** SHEET NO. **A2.1** TOTAL **35**

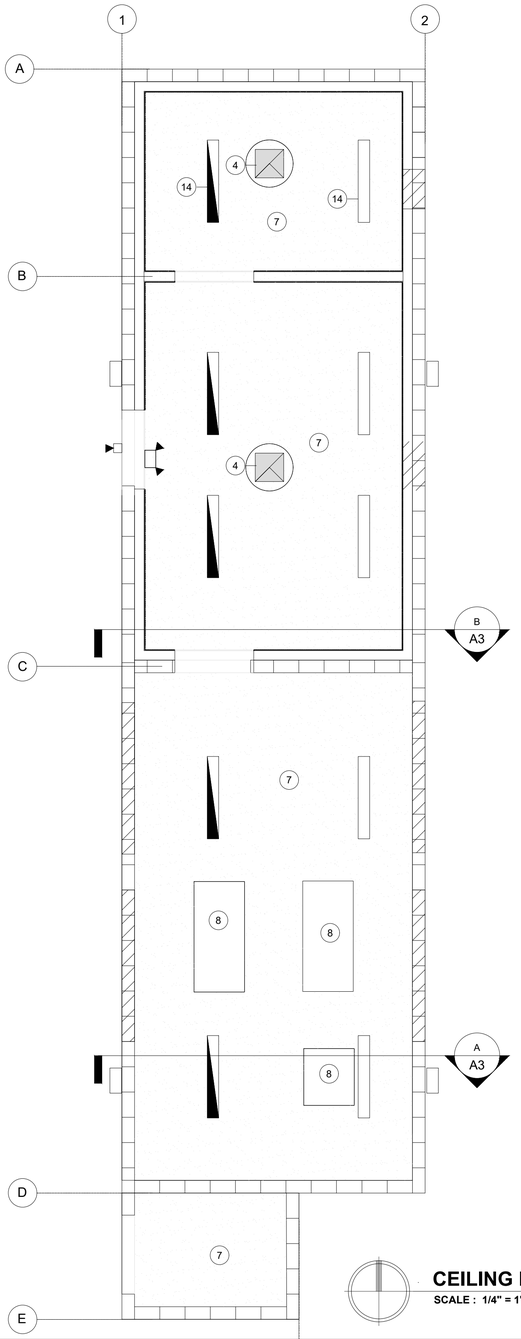


## CEILING PLAN

SCALE : 1/4" = 1'-0"

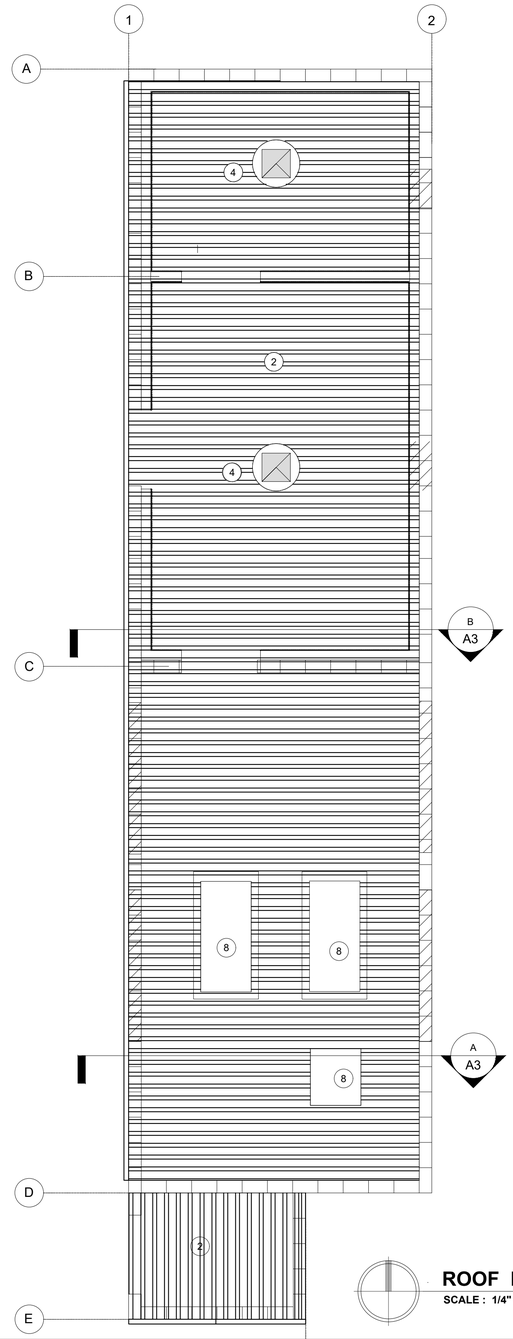


## ROOF PLAN

SCALE : 1/4" = 1'-0"

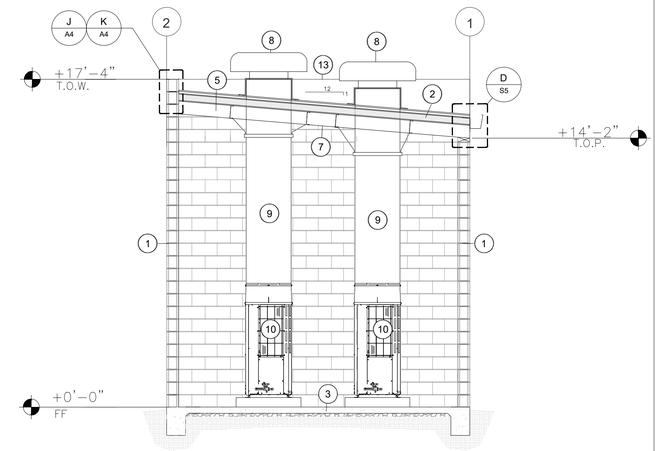


## A SECTION - EQUIPMENT ROOM

SCALE : 1/4" = 1'-0"

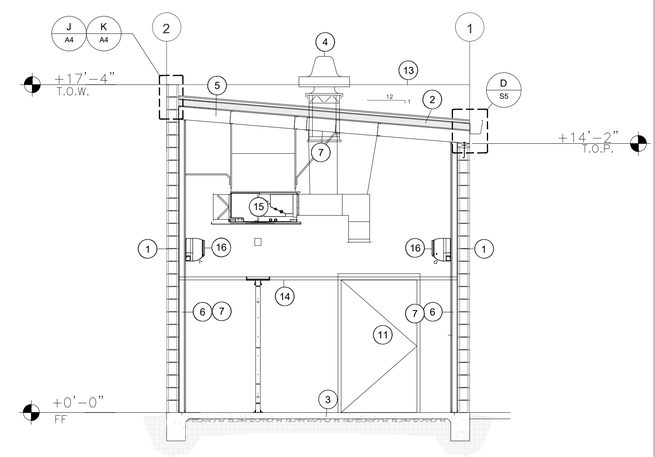


## B SECTION - RACK ROOM

SCALE : 1/4" = 1'-0"

# KEY NOTES

1. CMU BLOCK WALL (SEE STRUCTURAL DRAWING)
2. PRE-FINISHED STANDING SEAM METAL ROOF OVER 4" POLYISO RIGID INSULATE OVER 30 # FELT OVER $\frac{5}{8}$" THICK PLYWOOD
3. 4" CONCRETE SLAB (SEE STRUCTURAL DRAWING)
4. EXHAUST FAN (SEE MECHANICAL PLANS)
5. METAL ROOF RAFTER (SEE STRUCTURAL PLANS)
6. R-19 BATT INSULATION TYP. @ BATTERY ROOM AND NETWORK ROOM
7. $\frac{5}{8}$" GYPSUM BOARD ON METAL RAFTER
8. ROOF VENT (SEE MECHANICAL PLANS)
9. METAL DUCT (SEE MECHANICAL PLANS)
10. OUTDOOR UNIT (SEE MECHANICAL PLANS)
11. SOLID METAL DOOR
12. LIGHT FIXTURES (TYP.)
13. PARAPET WALL
14. CABLE RUNWAY
15. SUSPENDED INDOOR UNITS
16. WALL MOUNTED INDOOR UNITS

| | DATE | RECORD DRAWING | |
|---|---|---|---|
| DESIGNED: CZ | 4-15-23 | RESIDENT ENGINEER | DATE |
| DRAWN: CZ | 4-15-23 | | |
| CHECKED: JH | 5-2-23 | | |

FOR RIGHT OF WAY DATA AND ACCURATE ACCESS DETERMINATION, SEE DOCUMENTS IN THE DEPARTMENT OF PUBLIC WORKS AND PLANNING.

SCALE

HORIZ 0 10' 20'

VERT 0 1' 2'

1A

SUPERVISING ENGINEER

6/20/2024

DATE

REGISTERED PROFESSIONAL ENGINEER JOSEPH C. HARRELL No. C80424 CIVIL STATE OF CALIFORNIA

PROJECT

DEPARTMENT OF INTERNAL SERVICES
REEDLEY RADIO TOWER & EQUIPMENT SHELTER

THE COUNTY OF FRESNO

# CEILING AND ROOF PLAN SECTIONS

DRAWING NO. 11328 SHEET NO. A3 TOTAL 35

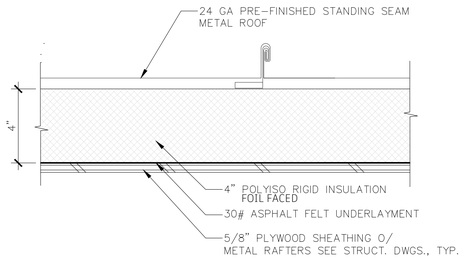


I / A4 **ROOF**

SCALE: 3" = 1'-0"

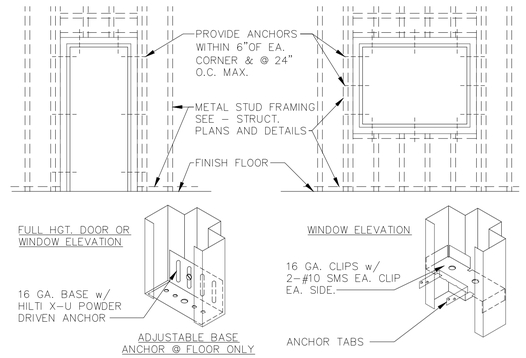


F / A4 **TYPICAL H.M. FRAME CONNECTION TO STEEL STUDS**

ADG130-01

SCALE: N.T.S.

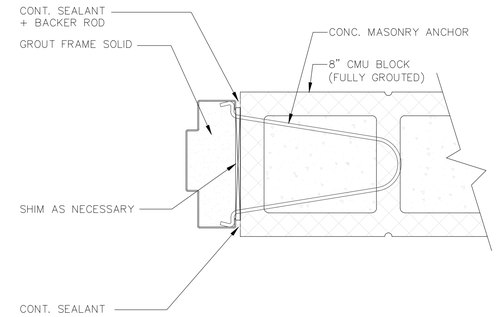


C / A4 **DOOR JAMB**

SCALE: 3" = 1'-0"

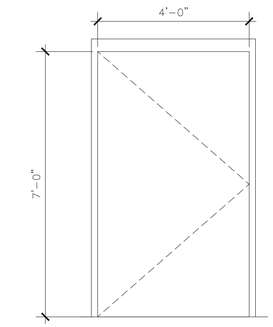


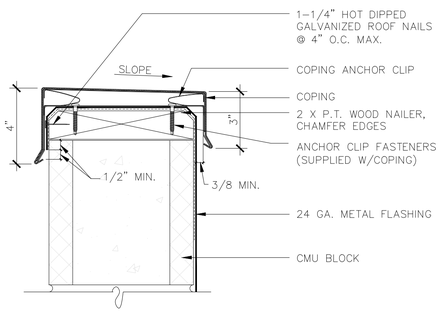


J / A4 **TYP. COPING**

SCALE: 3" = 1'-0"

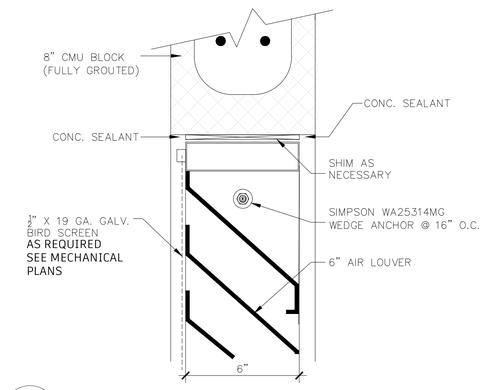


G / A4 **LOUVER HEAD**

SCALE: 3" = 1'-0"

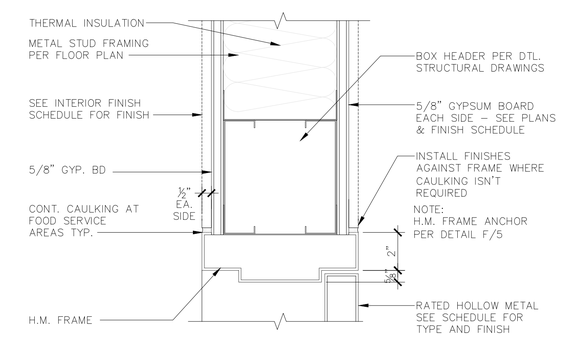


D / A4 **INTERIOR HOLLOW METAL DOOR HEAD**

ADD230-03

SCALE: 3" = 1'-0"

**DOOR SCHEDULE**

| DOOR NO. | DOOR OPENING SIZE | DOOR THK | DOOR MAT | DOOR CORE | DOOR FIN. | FRAME MAT | FRAME FIN | HARDWARE NO. | DETAILS HEAD | DETAILS JAMB | REMARKS |
|---|---|---|---|---|---|---|---|---|---|---|---|
| D1 | 4'-0" x 7'-0" | 1 3/4" | HM | P | FF | HM | FF | 1,2 | B/5 | C/5 | MAX. DUTY, PERFORMANCE LEVEL 4 METALLIC COATED EDGE CONSTRUCTION: MODEL 2 SEAMLESS SEE SECTION 081113 |
| D2 | 4'-0" x 7'-0" | 1 3/4" | HM | P | FF | HM | FF | 1,2 | D/5 | E/5 | MAX. DUTY, PERFORMANCE LEVEL 3 METALLIC COATED EDGE CONSTRUCTION: MODEL 2 SEAMLESS SEE SECTION 081113 |
| D3 | 4'-0" x 7'-0" | 1 3/4" | HM | P | FF | HM | FF | 1,2 | B/5 | C/5 | MAX. DUTY, PERFORMANCE LEVEL 3 METALLIC COATED EDGE CONSTRUCTION: MODEL 2 SEAMLESS SEE SECTION 081113 |

FF - FACTORY FINISH

HM - HOLLOW METAL

SEAL - SEALED CONCRETE

P - POLYSTYRENE

NOTES :

1. SEE SPECIFICATION SECTION 087100 FOR DOOR HARDWARE. DOORS ARE OPENABLE FROM INSIDE WITHOUT SPECIAL KNOWLEDGE, USE, EFFORT, OR KEY.
2. ALL OPENING HARDWARE TO BE MOUNTED @ CENTER LINE OF 34" ABOVE FINISH FLOOR

A / A4 **DOOR SCHEDULE**

SCALE: 1/2" = 1'-0"

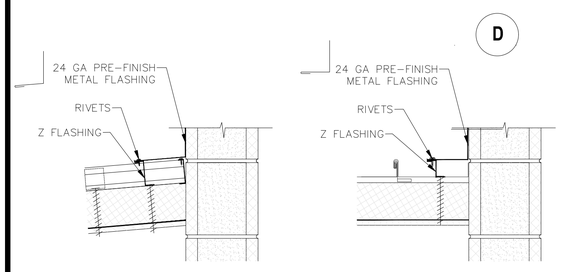


K / A4 **ROOF TO PARAPET WALL FLASHING**

SCALE: 1 1/2" = 1'-0"

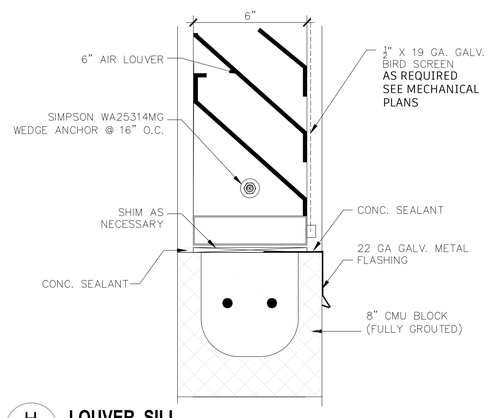


H / A4 **LOUVER SILL**

SCALE: 3" = 1'-0"

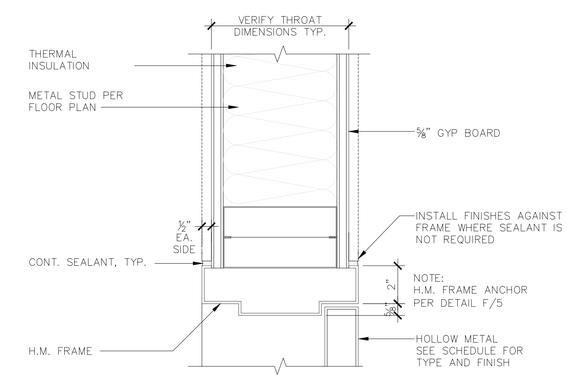


E / A4 **INTERIOR HOLLOW METAL DOOR JAMB**

ADD230-04

SCALE: 3" = 1'-0"

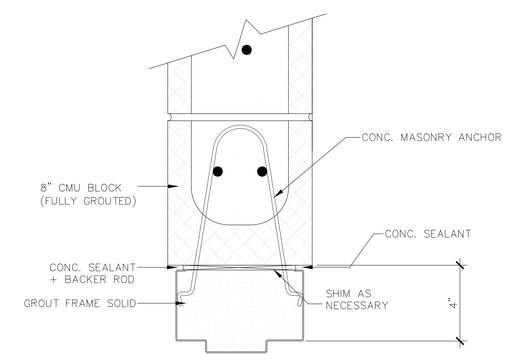


B / A4 **DOOR HEAD**

SCALE: 3" = 1'-0"

| | DATE | RECORD DRAWING | DATE |
|---|---|---|---|
| DESIGNED: CZ | 4-15-23 | RESIDENT ENGINEER | |
| DRAWN: CZ | 4-15-23 | | |
| CHECKED: JH | 5-2-23 | | |

FOR RIGHT OF WAY DATA AND ACCURATE ACCESS DETERMINATION, SEE DOCUMENTS IN THE DEPARTMENT OF PUBLIC WORKS AND PLANNING.

SCALE

HORIZ 0 10' 20'

VERT 0 1' 2'

SUPERVISING ENGINEER

6/20/2024

DATE

REGISTERED PROFESSIONAL ENGINEER JOSEPH C. HARRELL No. C80424 Exp.3/31/23 CIVIL STATE OF CALIFORNIA

PROJECT

DEPARTMENT OF INTERNAL SERVICES
REEDLEY RADIO TOWER AND EQUIPMENT SHELTER

THE COUNTY OF FRESNO

**DETAILS**

DRAWING NO. **11328** SHEET NO. **A4** TOTAL **35**

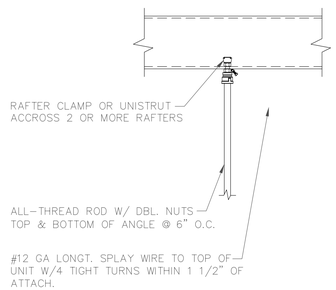


A / A5 **TYP. HANGING UNIT**

SCALE: N.T.S.

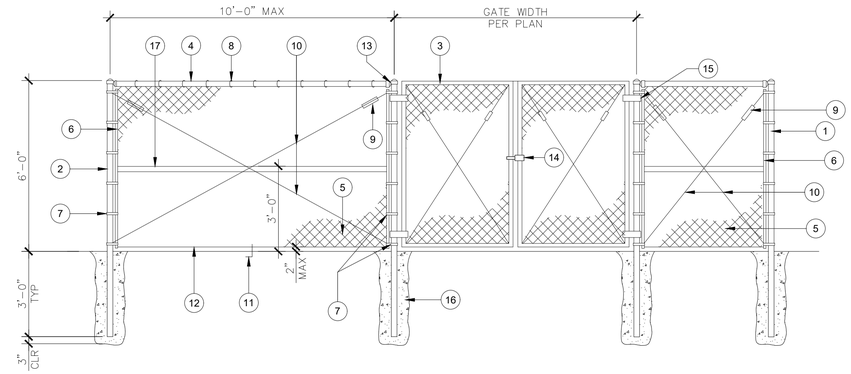


B / A5 **CHAIN LINK FENCE AND GATES**

## TYPICAL FENCE & GATE KEYNOTES

1. 4" O.D. GALVANIZED STEEL GATE POST (9.1 lb/ft)
2. 2 7/8" O.D. GALVANIZED STEEL END OR CORNER POST (5.79 lb/ft)
3. 2" O.D. GALVANIZED STEEL GATE FRAME (2.72 lb/ft)
4. 1 5/8" O.D. GALVANIZED STEEL HORIZONTAL RAIL (2.27 lb/ft)
5. 2"x2" MESH x 9 GAUGE GALVANIZED FENCE FABRIC WITH KNUCKLED TOP AND BOTTOM SELVAGE. FENCE FABRIC TO BE GALVANIZED BEFORE WEAVING (GBW)
6. 1/4"x3/4" GALVANIZED STEEL STRETCHER BAR
7. GALVANIZED STEEL STRETCHER BAR TENSION BAND, MIN. OF 6 TENSION BANDS
8. 9 GAUGE (0.148" DIA.) GALVANIZED STEEL TIE WIRES OR HOG RINGS AT 15" MAX. SPACING. MIN. 8 TIE WIRES PER EACH 10" HORIZONTAL RAIL
9. GALVANIZED ADJUSTABLE TURNBUCKLE FOR 3/8" DIA. TRUSS ROD
10. 3/8" DIA. GALVANIZED STEEL ADJUSTABLE TRUSS ROD. TRUSS RODS REQUIRED FOR ALL GATE POST PANELS AND END OR CORNER POST PANELS
11. 3/8"x6" GALVANIZED HOOK BOLT WITH NUT IMBEDDED IN MIDWAY BETWEEN POSTS
12. 7 GAUGE (0.177" DIA.) GALVANIZED STEEL TENSION WIRE
13. RAINPROOF CAP
14. LOCKING HASP
15. 180° GATE HINGE, TYP
16. 12"ø CONCRETE POST FOOTING (TYP.)
17. AT END OF RUN ONLY

SCALE: N.T.S.

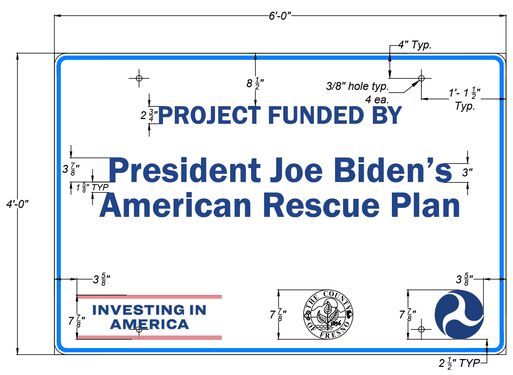


NOTES:

1. THE LEGEND OF SIGN SHALL BE BLACK ON A WHITE BACKGROUND (NON-REFLECTIVE)
2. THE BORDER OF THE SIGN SHALL BE BLUE (NON-REFLECTIVE)
3. PROJECT FUNDING SIGNS SHALL CONFORM TO SECTION 82 OF THE 2015 CALTRANS STANDARD SPECIFICATIONS

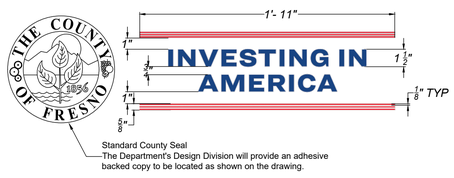


C / A5 **CONSTRUCTION PROJECT FUNDING SIGN**

SCALE: N.T.S.

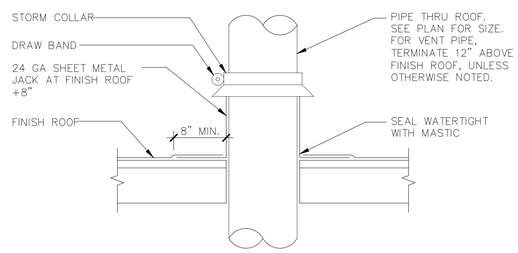


D / A5 **PIPE THROUGH ROOF**

SCALE: N.T.S.

| | DATE | RECORD DRAWING | DATE |
|---|---|---|---|
| DESIGNED: CZ | 4-15-23 | RESIDENT ENGINEER | |
| DRAWN: CZ | 4-15-23 | | |
| CHECKED: JH | 5-2-23 | | |

FOR RIGHT OF WAY DATA AND ACCURATE ACCESS DETERMINATION, SEE DOCUMENTS IN THE DEPARTMENT OF PUBLIC WORKS AND PLANNING.

SCALE
HORIZ 0 10' 20'
VERT 0 1' 2'

SUPERVISING ENGINEER — DATE 6/20/2024

REGISTERED PROFESSIONAL ENGINEER JOSEPH C. HARRELL No. C80424 CIVIL STATE OF CALIFORNIA

PROJECT
DEPARTMENT OF INTERNAL SERVICES
REEDLEY RADIO TOWER AND EQUIPMENT SHELTER

**DETAILS**

DRAWING NO. **11328** SHEET NO. **A5** TOTAL **35**

# BASIS OF DESIGN:

THE FOLLOWING APPLIED LOADS WERE USED IN THE DESIGN OF THE PROPOSED EQUIPMENT SHELTER :

ROOF LIVE LOAD = 20 PSF BASIC
ROOF DEAD LOADS = 10 PSF

WIND LOAD: EXPOSURE C
BASIC WIND SPEED = 94 MPH
WIND PRESSURE qh = 16.34 PSF
ENVELOPE PROCEDURE

SEISMIC LOAD SITE CLASS : D
SEISMIC DESIGN CATEGORY : D
Ie = 1.00
R = 5.0
SDS = .61
SD1 = .39
Cs = SDS / (R/I) = .122

# GENERAL STRUCTURAL NOTES:

1. ALL WORK SHALL BE PERFORMED IN ACCORDANCE WITH 2022 CALIFORNIA BUILDING CODE
2. THE CONTRACTOR SHALL VERIFY ALL DIMENSIONS PRIOR TO STARTING CONSTRUCTION. NOTIFY THE ENGINEER IMMEDIATELY OF ANY DISCREPANCIES OR INCONSISTENCIES.
3. NOTES AND DETAILS ON DRAWINGS SHALL TAKE PRECEDENCE OVER GENERAL NOTES AND TYPICAL DETAILS OR SPECIFICATIONS.
4. WHERE REFERENCE IS MADE TO VARIOUS TEST STANDARDS FOR MATERIALS, SUCH STANDARDS SHALL BE THE LATEST EDITION AND/OR ADDENDUM.
5. THE CONTRACT STRUCTURAL DRAWINGS AND SPECIFICATIONS REPRESENT THE FINISHED STRUCTURE. THEY DO NOT INDICATE THE METHOD OF CONSTRUCTION. THE CONTRACTOR SHALL PROVIDE ALL MEASURES NECESSARY TO PROTECT THE STRUCTURE DURING CONSTRUCTION. SUCH MEASURES SHALL INCLUDE, BUT NOT BE LIMITED TO, BRACING AND SHORING FOR LOADS DUE TO CONSTRUCTION EQUIPMENT.
6. TEMPORARY BRACING OR SHORING SHALL NOT BE REMOVED UNTIL MATERIALS REACH THEIR DESIGN STRENGTH.
7. OPENINGS, POCKETS, ETC. SHALL NOT BE PLACED IN SLABS, DECKS, BEAMS, JOISTS, COLUMNS, WALLS, ETC. UNLESS SPECIFICALLY DETAILED ON THE STRUCTURAL DRAWINGS. NOTIFY THE ENGINEER WHEN DRAWINGS BY OTHERS SHOW OPENINGS POCKETS ETC., NOT SHOWN ON THE STRUCTURAL DRAWINGS, BUT WHICH ARE LOCATED IN STRUCTURAL MEMBERS.
8. CONSTRUCTION MATERIALS SHALL BE SPREAD OUT IF PLACED ON FRAME FLOOR OR ROOF. LOAD SHALL NOT EXCEED THE DESIGN LIVE LOAD PER SQUARE FOOT. PROVIDE ADEQUATE SHORING AND/OR BRACING WHERE SUCH LOADS WOULD EXCEED DESIGN LIVE LOAD.
9. CONTRACTOR SHALL READ AND FOLLOW ALL REFERENCED ICC REPORTS FOR INSTALLATION OF ITEMS SHOWN. ALTERNATIVE METHODS OF CONSTRUCTION MAY BE SUBMITTIED FOR APPROVAL TO THE ENGINEER WITH APPLICABLE ICC REPORTS.
10. IT IS THE INTENT OF THESE PLANS TO PROVIDE DETAILS OF CONSTRUCTION NECESSARY TO GUIDE THE GENERAL CONTRACTOR WITH STRUCTURAL ASPECTS OF THE PROJECT ONLY.
11. DO NOT SCALE STRUCTURAL DRAWINGS. IF DIMENSIONS OR DETAILS ARE NOT CLEAR, OR IF DISCREPANCIES EXIST ON THE DRAWINGS CONTACT THE ARCHITECT/ENGINEER.
12. SEE MECHANICAL, ELECTRICAL AND/OR ARCHITECTURAL DRAWINGS FOR LOCATION AND SIZES OF PIPES, CONDUITS, FLOOR DRAINS, VENTS, DUCTS, DRAIN LEADERS AND OTHER SIMILAR OPENINGS NOT INDICATED ON THESE STRUCTURAL DRAWINGS.
13. SEE MECHANICAL, ELECTRICAL AND/OR ARCHITECTURAL DRAWINGS FOR EMBEDMENT OF BOLTS, ANCHORS AND OTHER MISCELLANEOUS EMBEDDED ITEMS NOT SHOWN ON THESE STRUCTURAL DRAWINGS.
14. SITE OBSERVATIONS OF THE PROJECT ARE NOT INTENDED TO INCLUDE REVIEW OF THE ADEQUACY OF THE CONTRACTOR'S SAFETY MEASURES IN, ON , OR NEAR THE CONSTRUCTION SITE.
15. ANY SUPPORT SERVICES PERFORMED BY THIS ENGINEER DURING CONSTRUCTION SHALL BE DISTINGUISHED FROM CONTINUOUS AND DETAILED INSPECTION SERVICES WHICH ARE FURNISHED BY OTHERS. THESE SUPPORT SERVICES PERFORMED BY THIS OFFICE WHETHER OF MATERIAL OR WORK, AND WHETHER PERFORMED PRIOR TO, DURING, OR AFTER COMPLETION OF CONSTRUCTION, ARE PERFORMED SOLELY FOR THE PURPOSE OF ASSISTING IN QUALITY CONTROL AND IN ACHIEVING CONFORMANCE WITH CONTRACT DRAWINGS AND SPECIFICATIONS BUT DO NOT GUARANTEE CONTRACTOR'S PERFORMANCE AND SHALL NOT BE CONSTRUED AS SUPERVISION OF CONSTRUCTION.
16. THE PROJECT SPECIFICATIONS AND SOILS REPORT ARE PART OF THE CONSTRUCTION DOCUMENTS. THE CONTRACTOR IS RESPONSIBLE FOR ADHERENCE TO ALL REQUIREMENTS OF THE CONSTRUCTION DOCUMENTS.

# MASONRY NOTES

(CBC CHAPTER 21)

1. STRENGTH SCHEDULE:

| USE | SPECIFIED COMPRESSIVE STRENGTH OF MASONRY F'm (psi) | COMPRESSIVE STRENGTH MASONRY UNITS (psi) | COMPRESSIVE STRENGTH OF GROUT (PSI) | MORTAR TYPE / 28 DAY STRENGTH (PSI) | REMARKS |
|---|---|---|---|---|---|
| WALL | 1500 | 1900 | 2000 | TYPE 'S' / 1500 | |

2. CONCRETE BLOCK UNITS SHALL CONFORM TO ASTM C90 GRADE N. TYPE I NORMAL WEIGHT UNITS.
3. MORTAR SHALL BE AS PER ASTM C270.
4. GROUT SHALL CONFORM TO ASTM C476 w/ SIKA GROUT AID, 8"-10" SLUMP.
5. REINFORCING STEEL SHALL CONFORM TO ASTM A615, GRADE 60.
6. BEFORE BLOCK IS PLACED ON CONCRETE. THOROUGHLY CLEAN CONCRETE OF ALL LAITANCE AND ALL LOOSE MATERIAL. ROUGHEN AS IN A CONCRETE CONSTRUCTED JOINT.
7. ALL CELLS SHALL BE GROUTED SOLID.
8. VERTICAL REINFORCING SHALL BE HELD IN POSITION AT TOP AND BOTTOM AND AT INTERVALS NOT EXCEEDING 200 BAR DIAMETERS.
9. WHEN GROUTING IS STOPPED FOR ONE HOUR OR LONGER, HORIZONTAL CONSTRUCTION JOINTS SHALL BE FORMED BY STOPPING THE POUR OF GROUT 1" TO 1/2" BELOW THE TOP OF THE UPPERMOST UNIT.
10. PLACE ALL HORIZONTAL BARS ON BOND BEAM UNITS.
11. UNITS SHALL BE LAID A MAXIMUM OF 2 FEET BEFORE GROUTING. GROUTING SHALL FOLLOW EACH 2 FEET OF CONSTRUCTION LAID AND SHALL BE VIBRATED BY MECHANICAL EQUIPMENT DURING PLACING AND RECONSOLIDATED AFTER EXCESS MOISTURE HAS BEEN ABSORBED, BUT BEFORE WORKABILITY IS LOST.
12. CEMENT SHALL CONFORM TO ASTM C-150. TYPE II
13. LIME SHALL CONFORM TO ASTM C-207
14. AGGREGATES FOR MORTAR: AGGREGATES FOR MORTAR SHALL BE WASHED SAND CONFORMING TO ASTM C-144, WITH AT LEAST 5 PERCENT PASSING THE NO. 200 SIEVE.
15. FINE AGGREGATES FOR GROUT: FINE AGGREGATES FOR GROUT SHALL CONFORM TO ASTM C-404, WITH THE GRADING REQUIREMENTS FOR SIZE NO. 1
16. COARSE AGGREGATES FOR GROUT: COARSE AGGREGATES FOR GROUT SHALL CONFORM TO ASTM C-404 WITH THE GRADING REQUIREMENTS FOR SIZE NO. 8, EXCEPT 100 PERCENT SHALL PASS THE 3/8" SIEVE AND NOT MORE THAN 5 PERCENT SHALL PASS THE NO. 8 SIEVE.
17. CONCRETE MASONRY UNITS SHALL BE NORMAL WEIGHT, TYPE "N" AS SET FORTH IN A.S.T.M. C90. THE FOLLOWING MINIMUM STRENGTH FOR TYPE 1, MOISTURE CONTROLLED UNITS SHALL BE:
    - 8" CMU $f'_m$ = 2000 PSI
    - 10" CMU $f'_m$ = 2000 PSI
    - 12" CMU $f'_m$ = 2000 PSI
    - 16" CMU $f'_m$ = 2000 PSI
18. SEE ARCHITECTURAL DRAWINGS FOR COLOR & SURFACE TREATMENT OF EXPOSED CMU UNITS.
19. MASONRY, EXCEPT MASONRY VENEER, SHALL BE CONSTRUCTED WITHIN THE TOLERANCES SPECIFIED IN A.C.I. 530.1/A.S.C.E. 6/T.M.S. 602.
20. MASONRY UNITS SHALL BE LAID IN RUNNING BOND.
21. MORTAR SHALL CONFORM TO A.S.T.M. C270 AND BE TYPE "S" WITH A MINIMUM COMPRESSIVE STRENGTH OF 2000 P.S.I. AT 28 DAYS WITH MORTAR PROPORTIONS PER A.S.T.M. C270 TABLE 1.
22. GROUT SHALL CONFORM TO A.S.T.M. C476, AND HAVE A MINIMUM COMPRESSIVE STRENGTH OF 2000 PSI AT 28 DAYS.
23. GROUT SHOULD BE PUDDLED OR TAMPED WITH A 5/8" ROD OR A 1"x2" STICK AS IT IS PLACED.
24. ALL CELLS SHALL BE GROUTED SOLID BY LOW LIFT (4'-0" MAX.) OR HIGH-LIFT GROUTING METHOD. IF A HIGH-LIFT GROUTING METHOD IS USED IT MUST HAVE THE APPROVAL OF THE STRUCTURAL ENGINEER.
25. GROUTING OF BEAMS OVER OPENINGS SHALL BE DONE IN CONTINUOUS OPERATION WITH A MINIMUM 12" SEAT AT EACH END UNLESS PLACED IN TOTAL WITH WALL GROUTING. ALL WALL OPENINGS SHALL BE SHORED FOR A MINIMUM OF 28 DAYS AFTER COMPLETION OF GROUTING, U.N.O.
26. ALL REINFORCING SHALL CONFORM TO A.S.T.M. A615 AND SHALL BE GRADE 40 FOR #3 BAR, GRADE 60 FOR #4 BAR AND LARGER.
27. ALL WELDING OF REINFORCING STEEL SHALL BE WITH LOW HYDROGEN ELECTRODES U.N.O. WELDING OF REINFORCING SHALL BE ALLOWED ONLY WHERE DETAILED ON DRAWINGS. ALL WELDING SHALL BE DONE IN ACCORDANCE WITH AMERICAN WELDING SOCIETY SPECIFICATIONS A.W.S. D1.4. WELDING SHALL NOT BE DONE WITHIN TWO BAR DIAMETERS OF ANY BENT PORTION OF A BAR WHICH HAS BEEN BENT COLD. WELDING OF CROSSING BARS SHALL NOT BE PERMITTED FOR ASSEMBLY OF REINFORCEMENT UNLESS AUTHORIZED BY THE STRUCTURAL ENGINEER OF RECORD. A.S.T.M. A706 REINFORCING SHALL BE USED FOR ALL REINFORCING THAT IS BEING WELDED.
28. VERTICAL REINFORCING SHALL BE CENTERED IN WALL, U.N.O., AND PLACED IN OPEN END UNITS BEFORE BLOCK WORK BEGINS. VERTICAL REINFORCING SHALL BE HELD IN POSITION AT TOP, BOTTOM AND AT INTERVALS NOT EXCEEDING 192 BAR DIAMETERS.
29. HORIZONTAL REINFORCING SHALL BE LAID IN BOND BEAM UNITS AND SECURELY WIRED TO THE VERTICAL REINFORCING.
30. DOWELS IN ALL FOUNDATIONS SHALL HAVE THE SAME LOCATION, SIZE, AND SPACING AS THE VERTICAL MASONRY REINFORCING.
31. PROVIDE CLEANOUT OPENINGS FOR ALL WALLS AT THE BOTTOM OF EACH POUR IN ACCORDANCE WITH C.B.C. 2016 REQUIREMENTS.
32. ANCHOR BOLTS MUST BE SET WITH TEMPLATES AND HELD IN PLACE PRIOR TO GROUTING. PROVIDE AT LEAST 1" OF GROUT BETWEEN THE HEAD OF THE ANCHOR BOLT AND THE INSIDE FACE OF MASONRY SHELL.
33. ANCHOR BOLTS MUST BE SET WITH TEMPLATES AND HELD IN PLACE PRIOR TO GROUTING. PROVIDE AT LEAST 1" OF GROUT BETWEEN THE HEAD OF THE ANCHOR BOLT AND THE INSIDE FACE OF MASONRY SHELL.
34. ALL ANCHOR BOLTS SHALL BE HEX-HEADED.
35. PLACEMENT OF REINFORCEMENT REQUIREMENTS:
    - THE CLEAR DISTANCE BETWEEN PARALLEL BARS SHALL NOT BE LESS THAN THE NOMINAL DIAMETER OF THE BAR, NOR LESS THAN 1".
    - IN COLUMNS AND PILASTERS, THE CLEAR DISTANCE BETWEEN VERTICAL BARS SHALL NOT BE LESS THAN 1.5 TIMES THE NOMINAL BAR DIAMETER, NOR LESS THAN 1 1/2".
    - REINFORCEMENT EMBEDDED IN GROUT SHALL HAVE A THICKNESS OF GROUT BETWEEN THE REINFORCEMENT AND MASONRY UNIT NOT LESS THAN 1/2".
36. REINFORCING BARS SHALL HAVE A MASONRY COVER NOT LESS THAN THE FOLLOWING:
    - MASONRY FACE EXPOSED TO EARTH OR WEATHER: 2" FOR #6 & GREATER BARS, 1 1/2" FOR #5 & SMALLER BARS.
    - MASONRY NOT EXPOSED TO EARTH OR WEATHER: 1 1/2" FOR ALL BAR SIZES.

# FOUNDATION NOTES:

1. NOMINAL TOP OF FLOOR SLAB ELEVATION = DATUM 0'-0" UNLESS OTHERWISE NOTED.
2. ALL FOOTINGS SHALL EXTEND TO FIRM BEARING IN UNDISTURBED SOIL OR ENGINEERED FILL.
3. SEE ARCHITECTURAL DRAWINGS FOR SIZE AND LOCATION OF NON-BEARING PARTITIONS.
4. SEE ARCHITECTURAL DRAWINGS FOR LOCATION AND EXTENT OF EXTERIOR WALKWAYS.
5. CONSTRUCTION JOINTS ARE TO BE PROVIDED AT INTERIOR NON-BEARING PARTITIONS TO BREAK FLOOR SLAB INTO WORKING AREAS WITH A MAXIMUM LENGTH TO WIDTH RATIO NOT EXCEEDING 2 : 1 AND NOT LARGER THAN 1000 S.F. AREAS SHALL BE POURED IN AN ALTERNATE SEQUENCE.
6. FOUNDATIONS FOR BUILDINGS SHALL BE STEPPED AS REQUIRED SO THAT BOTH TOP AND BOTTOM OF SUCH FOUNDATIONS ARE LEVEL.
7. ALL REINFORCING STEEL, ANCHOR BOLTS, AND OTHER EMBEDDED ITEMS SHALL BE SECURELY POSITIONED IN THE FORMS PRIOR TO POURING OF CONCRETE.
8. ALL CONCRETE AND MASONRY WALLS AND COLUMNS SHALL BE DOWELED INTO FOOTINGS WITH BARS OF THE SAME SIZE AND SPACING AS THE VERTICAL WALL BARS UNLESS OTHERWISE NOTED. SEE CONCRETE AND MASONRY NOTES FOR LAP REQUIREMENTS.
9. SHORING AND BRACING: IT SHALL BE THE CONTRACTORS RESPONSIBILITY TO DESIGN AND PROVIDE ADEQUATE SHORING, BRACING AND FORM WORK AS REQUIRED FOR THE CONSTRUCTION OF THE BUILDING. PROVIDE TEMPORARY BRACING AS REQUIRED TO HOLD THE VARIOUS ELEMENTS IN PLACE UNTIL FINAL SUPPORT IS SECURELY ANCHORED.
10. EXCAVATION: THE CONTRACTOR SHALL BE RESPONSIBLE FOR ALL EXCAVATION PROCEDURES AND FOR PROTECTION OF ADJACENT PROPERTY, STRUCTURES, STREETS, AND UTILITIES.
11. BACKFILL: DO NOT BACKFILL AROUND THE EXTERIOR PERIMETER WALL UNTIL AFTER THE WALLS ARE SUPPORTED BY THE COMPLETION OF THE INTERIOR FLOOR SYSTEMS. DO NOT BACKFILL UNTIL 7 DAYS MINIMUM AFTER COMPLETION OF THE FLOOR SLABS.
12. FOUNDATION DESIGNS ARE BASED UPON SOILS REPORT #A26360.01, DATED SEPTEMBER 6, 2023 BY MOORE TWINING ASSOCIATES INC. PARAMETERS ARE AS FOLLOWS:
    A. MAXIMUM ALLOWABLE SOIL BEARING PRESSURE:
       DEAD LOAD PLUS LIVE LOAD = 2.5 KSF
    B. PASSIVE RESISTANCE = 275.0 PCF
    C. COEFFICIENT OF FRICTION = 0.30
13. SEE DETAIL SHEET 1 AND SOILS REPORT FOR SOIL PREPARATION REQUIREMENTS.
14. ALL CONTINOUS FOOTING REINFORCEMENT SHALL RUN THROUGH PAD FOOTINGS.

# CONCRETE NOTES:

1. PROPERTIES** OF CONCRETE SHALL BE AS FOLLOWS:

| USE | MAXIMUM AGGREGATE SIZE | MINIMUM 28 DAY COMP. STRENGTH (PSI) | MAXIMUM WATER/CEMENT RATIO | MINIMUM CEMENT SACK PER CY | MAX. SLUMP |
|---|---|---|---|---|---|
| ALL | 1" | 3000 | 0.45 | 6.5 | 4" |
| | | | | | |

** SEE SPECIFICATIONS FOR ADDITIONAL REQUIREMENTS

2. CONCRETE SPECIFIED IN THESE DRAWINGS SHALL BE CONSIDERED AS STRUCTURAL CONCRETE.
3. THE DIMENSIONS SHOWN FOR LOCATION OF REINFORCING STEEL ARE TO FACE OF BAR AND DENOTE CLEAR COVERAGE. UNLESS SPECIFICALLY NOTED, CONCRETE COVERAGE SHALL BE AS FOLLOWS:

| LOCATION | COVERAGE |
|---|---|
| CONCRETE DEPOSITED DIRECTLY AGAINST THE GROUND (EXCEPT SLABS) ------ | 3" |
| CONCRETE EXPOSED TO THE GROUND BUT PLACED IN FORMS ---------- | 2" |
| SLABS ON GRADE (CLEARANCE TO TOP SURFACE) ---------- | SEE PLANS & DETAILS |

4. REINFORCEMENT SHALL CONFORM TO ASTM A615 GRADE 60.
5. CONTINUOUS REINFORCEMENT SHALL BE SPLICED BY LAPPING THE REINFORCEMENT WITH THE MINIMUM LENGTH SHOWN IN DETAIL G ON SHEET 7
6. WELDED WIRE FABRIC SHALL CONFORM TO ASTM A185. SPLICE BY LAPPING ADJOINING PIECES NOT LESS THAN THE SPACING OF THE CROSS WIRES + 2".
7. SEE ARCHITECTURAL AND CIVIL DRAWINGS FOR NON-STRUCTURAL EXTERIOR SLABS AND WALKWAYS.
8. ANCHOR BOLTS EXTENDING TO THE BOTTOM OF FOOTING SHALL HAVE MINIMUM 3" CONCRETE COVER.
9. ALL ANCHOR BOLTS SHALL CONFORM TO ASTM A307, UNLESS NOTED OTHERWISE.
10. ALL MOULDS, ORNAMENTS, GROOVES, CLIPS, ANCHOR BOLTS, ETC., SHOWN ON ARCHITECTURAL DRAWINGS SHALL BE PROVIDED FOR IN THE FORM WORK BEFORE THE CONCRETE IS POURED.
11. REFER TO BOTH ARCHITECTURAL AND MECHANICAL DRAWINGS FOR LOCATION AND SPACING OF ALL PLUMBING FIXTURES.
12. ALL REINFORCING STEEL, ANCHOR BOLTS, DOWEL AND OTHER INSERTS SHALL BE WELL SECURED IN POSITION PRIOR TO POURING CONCRETE.
13. ANCHOR BOLTS OR SILL BOLTS SHALL HAVE A 4" DIAMETER TAIL AT ENDS UNLESS OTHERWISE NOTED. DO NOT USE UPSET (ROLLED) THREADS.
14. ALL WELDING OF REINFORCEMENT SHALL BE LOW HYDROGEN ELECTRODES UNLESS OTHERWISE NOTED. WELDING OF REINFORCING SHALL BE ALLOWED ONLY WHERE DETAILED ON DRAWINGS. ALL WELDING SHALL BE DONE IN ACCORDANCE WITH THE AMERICAN WELDING SOCIETY SPECIFICATIONS AWS D1.4. WELDING SHALL NOT BE DONE WITHIN TWO BAR DIAMETERS OF ANY BENT PORTION OF A BAR THAT HAS BEEN BENT COLD. WELDING OF CROSSING BARS SHALL NOT BE PERMITTED FOR ASSEMBLY OF REINFORCEMENT UNLESS AUTHORIZED BY THE STRUCTURAL ENGINEER OF RECORD. ASTM A706 REINFORCING SHALL BE USED FOR ALL REINFORCING THAT IS BEING WELDED.
15. PIPES LARGER THAN 1-1/2" DIAMETER SHALL NOT BE EMBEDDED IN STRUCTURAL CONCRETE EXCEPT WHERE SPECIFICALLY APPROVED BY ENGINEER. PIPES SHALL NOT DISPLACE OR INTERRUPT REINFORCING BARS.
16. SEE PROJECT SPECIFICATIONS FOR ADDITIONAL CONCRETE MIX DESIGN REQUIREMENTS.

# SPECIAL INSPECTION NOTES:

1. IN ACCORDANCE WITH THE REFERENCED CODE, THE CONTRACTOR OWNER SHALL EMPLOY A SPECIAL INSPECTOR WHO SHALL PROVIDE INSPECTIONS DURING CONSTRUCTION ON THE FOLLOWING TYPES OF WORK:

A. EMBEDDED ITEMS IN CONCRETE OR MASONRY WALLS - PERIODIC
B. STRUCTURAL STEEL WELDING - CONTINUOUS
C. INSTALLATION OF EXPANSION OR EPOXIED ANCHORS
D. ALL MASONRY - CONTINUOUS
E. ALL POST INSTALLED ANCHORS - CONTINUOUS
F. ADEQUACY AND PREPARATION OF ALL FILL MATERIALS AND SUBGRADE - PERIODIC
G. PLACEMENT AND COMPACTION OF FILL MATERIALS - CONTINUOUS
H. PLACING OF REINFORCING STEEL - PERIODIC
I. PLACING OF REINFORCED CONCRETE - PERIODIC

2. SPECIAL INSPECTOR'S BACKGROUND AND QUALIFICATIONS SHALL BE FORWARDED TO THE ENGINEER AT LEAST 3 DAYS BEFORE ANY INSPECTIONS ARE PERFORMED.
3. "CONTINUOUS" SPECIAL INSPECTION MEANS THE FULL-TIME OBSERVATION OF WORK REQUIRING SPECIAL INSPECTION BY AN APPROVED SPECIAL INSPECTOR WHO IS PRESENT IN THE AREA WHERE THE WORK BEING PERFORMED. "PERIODIC" SPECIAL INSPECTION MEANS THE PART-TIME OR INTERMITTENT OBSERVATION OF WORK REQUIRING SPECIAL INSPECTION WHO IS PRESENT IN THE AREA WHERE WORK HAS BEEN, OR IS , BEING PERFORMED AND AT THE COMPLETION OF WORK.
4. INSPECTION OF PREFABRICATED CONSTRUCTION SHALL BE THE SAME AS IF THE MATERIAL USED IN THE CONSTRUCTION TOOK PLACE ON SITE.
5. ANY CONSTRUCTION OR MATERIAL THAT HAS FAILED INSPECTION SHALL BE SUBJECT TO REMOVAL AND REPLACEMENT AT CONTRACTOR'S EXPENSE.
6. EPOXY AND EXPANSION ANCHORS MAY BE USED ONLY WHEN APPROVED BY THE ENGINEER.
7. SPECIAL INSPECTION OF SOILS SHALL REFERENCE THE APPROVED SOILS REPORT TO DETERMINE COMPLIANCE.
8. SEE THE PROJECT SPECIFICATIONS FOR ADDITIONAL TESTING AND INSPECTION REQUIREMENTS.

| | DATE | RECORD DRAWING | DATE |
|---|---|---|---|
| DESIGNED: CZ | 4-15-23 | RESIDENT ENGINEER | |
| DRAWN: CZ | 4-15-23 | | |
| CHECKED: JH | 5-2-23 | | |

FOR RIGHT OF WAY DATA AND ACCURATE ACCESS DETERMINATION, SEE DOCUMENTS IN THE DEPARTMENT OF PUBLIC WORKS AND PLANNING.

SCALE
HORIZ 0 10' 20'
VERT 0 1' 2'

SUPERVISING ENGINEER — DATE 6/20/2024

REGISTERED PROFESSIONAL ENGINEER JOSEPH C. HARRIEL No. C80424 CIVIL STATE OF CALIFORNIA

PROJECT
DEPARTMENT OF INTERNAL SERVICES
REEDLEY RADIO TOWER AND EQUIPMENT SHELTER

THE COUNTY OF FRESNO

**STRUCTURAL GEN NOTES**

DRAWING NO. **11328** SHEET NO. **S1** TOTAL **35**

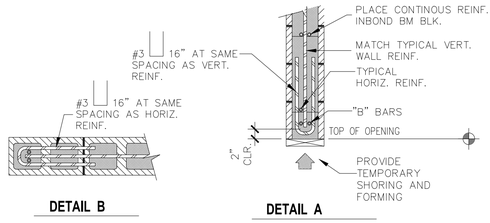


DETAIL B

DETAIL A

NOTES:

1. TYPICAL HORIZONTAL REINFORCING SHOWN AT BLOCK ABOVE HEADER ALTHOUGH IN SOME CASES IT MAY BE LOCATED IN BLOCK ABOVE DEPENDING ON HORIZONTAL BAR LAYOUT.
2. FOR OPENING WIDTHS OF 4'-0" OR SMALLER, "B" BARS MAY BE PLACED IN NOTCH OF UPRIGHT BOND BEAM BLOCK (I.E. AT 5 1/2"? CLEARANCE FROM TOP OF OPENING) AND ANY CONTINUOUS BARS LOCATED IN THIS POSITION MAY BE COUNTED AS APPLYING TO MIN. HEAD REINFORCEMENT.

| OPENING WIDTH | "A" BARS | "B" BARS | "C" BARS |
|---|---|---|---|
| 2'-0" OR SMALLER | 1 - #5 | 1 - #5 | NONE |
| 2'-1" TO 4'-0" | 2 - #5 | 1 - #5 | 1 - #5 |
| OVER 4'-0" | 2 - #5 | 2 - #6 | 1 - #5 |

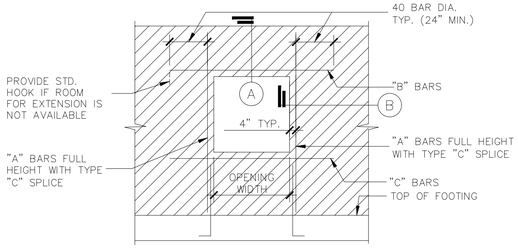


NOTE:
REINFORCEMENT SHOWN IS TYPICAL REINFORCEMENT REQUIRED FOR ALL OPENINGS UNLESS DIFFERENT REINFORCEMENT IS SHOWN ON SPECIFIC WALL ELEVATIONS.

## H / S2 REINFORCEMENT AT BLOCK WALL OPENING

SCALE: 1" = 1'-0"

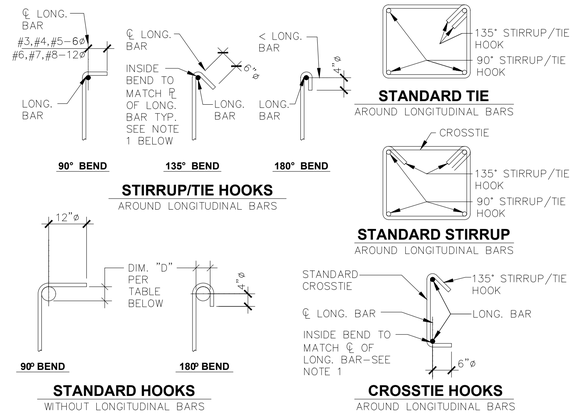


| BENT BAR SIZE | BENT BAR DIA. | DIM. FOR: 4ø | 6ø | 8ø | 12ø | DIM. "D" |
|---|---|---|---|---|---|---|
| 3 | 0.375" | 2.50" | 3.00" | 3.00" | 4.50" | 2.25" |
| 4 | 0.500" | 2.50" | 3.00" | 4.00" | 6.00" | 3.00" |
| 5 | 0.625" | 2.50" | 3.75" | 5.00" | 7.50" | 3.75" |
| 6 | 0.750" | 3.00" | 4.50" | 6.00" | 9.00" | 4.50" |
| 7 | 0.875" | 3.50" | 5.25" | 7.00" | 10.50" | 5.25" |
| 8 | 1.000" | 4.00" | 6.00" | 8.00" | 12.00" | 6.00" |
| 9 | 1.125" | 4.50" | 6.75" | 9.00" | 13.50" | 9.00" |
| 10 | 1.250" | 5.00" | 7.50" | 10.00" | 15.00" | 10.00" |

NOTES:

1. INSIDE RADIUS BEND OF THE BAR ENCLOSING THE LONGITUDINAL BAR SHALL NOT BE LESS THAN THE RADIUS OF THE LONGITUDINAL BAR.
2. INSIDE DIAMETER OF BENDS IN WELDED WIRE FABRIC, PLAIN OR DEFORMED, FOR STIRRUPS AND TIES SHALL BE AT LEAST FOUR WIRE DIAMETERS FOR WIRE LARGER THAN D6 OR W6 AND TWO WIRE DIAMETERS FOR ALL OTHER WIRES. BENDS WITH INSIDE DIAMETER OF LESS THAN EIGHT WIRE DIAMETERS SHALL BE LESS THAN FOUR DIAMETERS FROM THE NEAREST WELDED INTERSECTION.
3. UNLESS NOTED OTHERWISE ABOVE, BAR BENDS SHALL NOT EXTEND LESS THAN 6 BAR DIAMETERS.

## F / S2 TYPICAL REINFORCEMENT BENDS

SCALE: 1/2" = 1'-0"

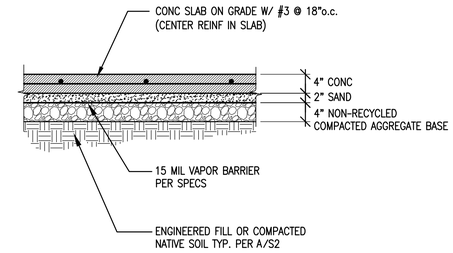


NOTE:
SEE FOUNDATION NOTES, CIVIL DRAWINGS, AND SOILS REPORT FOR ADDITIONAL REQUIREMENTS

## C / S2 TYPICAL SLAB ON GRADE

SCALE: N.T.S.

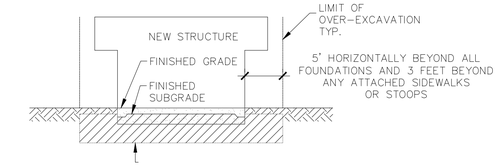


OVER-EXCAVATE 24" BELOW BOTTOM OF STRUCTURE FOOTINGS OR BELOW EXISTING SITE GRADES, TO THE DEPTH REQUIRED TO REMOVE ALL FILL AND PAVEMENT MATERIALS TO EXPOSE UNDISTURBED NATIVE SOILS WHICHEVER IS GREATER. THE EXPOSED SUBGRADE MUST BE PROOF-ROLLED. SOFT OR PLIANT AREAS MUST BE OVER-EXCAVATED TO FIRM NATIVE SOIL. THE EXPOSED SURFACE MUST BE SCARIFIED TO A DEPTH OF 8 INCHES, MOISTURE-CONDITIONED AND COMPACTED AS ENGINEERED FILL. SEE SOILS REPORT AND PROJECT SPECIFICATIONS FOR OTHER INFORMATION.

## A / S2 OVER EXCAVATION AND COMPACTION

SCALE: 1/2" = 1'-0"

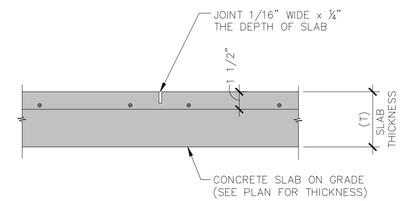


NOTE: SAWCUT SLAB WITHIN 12 HOURS OF POUR AND IN ACCORDANCE WITH AC1 302.IR

## D / S2 SLAB CONTROL JOINT (C.J.)

SCALE: N.T.S.

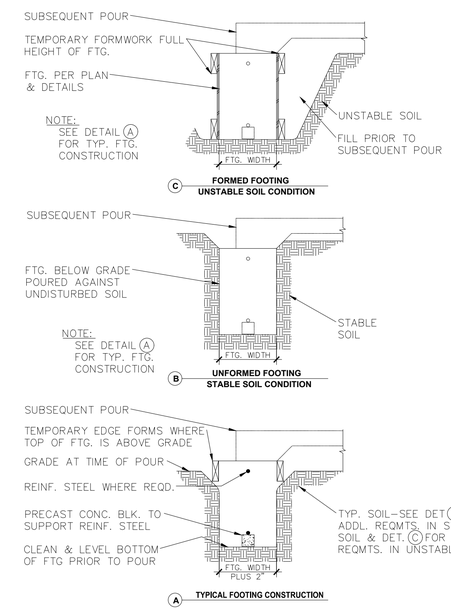


NOTES:

1. ALL FOOTINGS SHALL BE PLACED PER THE TYPICAL REQUIREMENTS OF DETAIL A.
2. FOOTINGS MAY BE POURED DIRECTLY INTO NEAT EXCAVATIONS PER DETAIL B WHERE SOIL IS CONSIDERED STABLE AS DETERMINED BY THE ARCHITECT OR SOILS ENGINEER.
3. PROVIDE FORMWORK PER DETAIL C WHERE SOIL IS CONSIDERED UNSTABLE AS DETERMINED BY THE ARCHITECT OR SOILS ENGINEER.
4. SEE THE SOILS REPORT FOR OTHER REQUIREMENT.

## B / S2 TYPICAL FOUNDATION FORMWORK

SCALE: 3/4" = 1'-0"

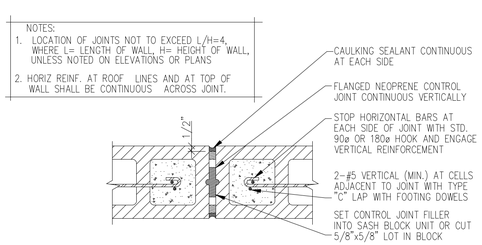


## I / S2 CONCRETE BLOCKWALL CONTROL JOINT

SDF010-09

SCALE: 1/2" = 1'-0"

| LAP LENGTH | | | | | | | | | |
|---|---|---|---|---|---|---|---|---|---|
| BAR SIZE | #3 | #4 | #5 | #6 | #7 | #8 | #9 | #10 | #11 |
| BOTTOM BAR | 22" | 29" | 36" | 43" | 63" | 72" | 81" | 91" | 101" |
| TOP BAR | 28" | 37" | 47" | 56" | 81" | 93" | 105" | 118" | 131" |

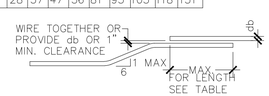


NOTES:

1. SPLICES ARE SHOWN IN INCHES AND SHALL CONFORM TO CLASS "B" SPLICES AS PER ACI 318 (LATEST EDITION).
2. SPLICE LENGTHS ASSUME THE MODIFICATION FACTORS OF ACI 318 SECTIONS 12.2 ARE 1.0. FOR OTHER CONDITIONS PROVIDE SPLICE LENGTHS IN ACCORDANCE WITH ACI 318.
3. USE THE SPLICE LENGTH GIVEN FOR TOP BARS WHEN MORE THAN 12" OF CONC. IS CAST BELOW HORIZONTAL BARS IN THE MEMBER. USE THE SPLICE LENGTH GIVEN FOR BOTTOM BARS FOR ALL OTHER CONDITIONS.

## G / S2 CONCRETE REINF. BAR SPLICE LENGTH

SCALE: 1" = 1'-0"

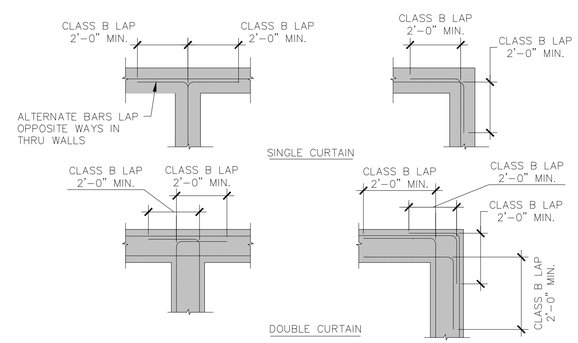


## E / S2 TYPICAL REINFORCING (DETAIL FOR FOUNDATION & WALLS)

SCALE: 1/2" = 1'-0"

| | DATE | RECORD DRAWING | DATE |
|---|---|---|---|
| DESIGNED: CZ | 4-15-23 | RESIDENT ENGINEER | |
| DRAWN: CZ | 4-15-23 | | |
| CHECKED: JH | 5-2-23 | | |

FOR RIGHT OF WAY DATA AND ACCURATE ACCESS DETERMINATION, SEE DOCUMENTS IN THE DEPARTMENT OF PUBLIC WORKS AND PLANNING.

SCALE
HORIZ 0 10' 20'
VERT 0 1' 2'

SUPERVISING ENGINEER

6/20/2024
DATE

REGISTERED PROFESSIONAL ENGINEER JOSEPH C. HARPRELL No. C80424 CIVIL STATE OF CALIFORNIA

PROJECT

DEPARTMENT OF INTERNAL SERVICES
REEDLEY RADIO TOWER AND EQUIPMENT SHELTER

THE COUNTY OF FRESNO

# STRUCTURAL DETAILS

DRAWING NO. 11328 SHEET NO. S2 TOTAL 35

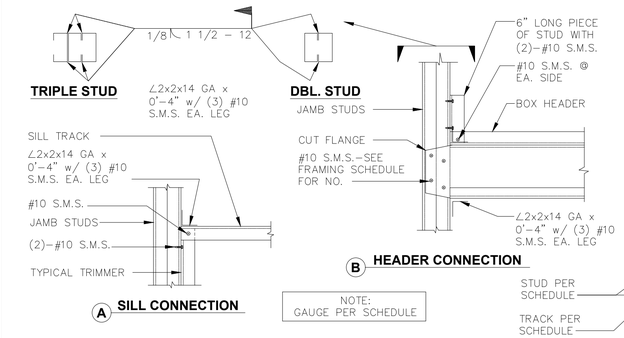


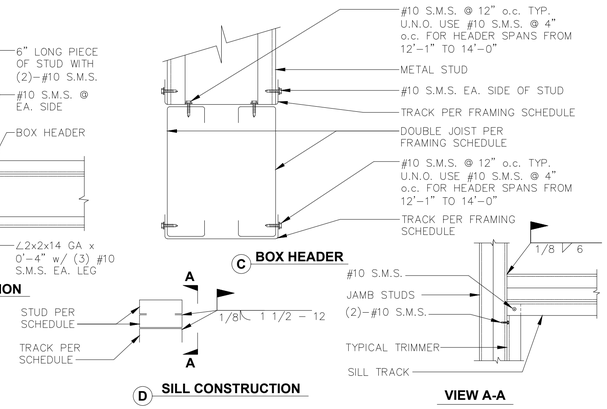


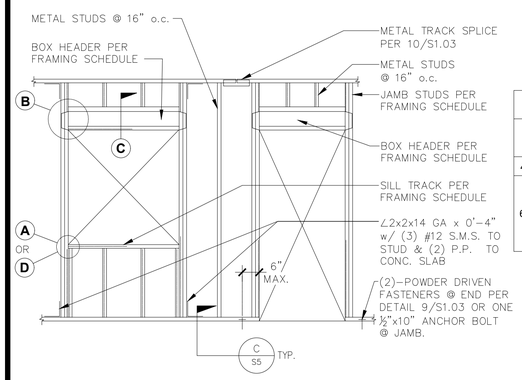


## HEADER FRAMING SCHEDULE

| WALL TYPE | SPAN LENGTH | BOX HEADER | | JAMB STUDS | SILL TRACK | NO #10 S.M.S. AT EACH JOIST TO JAMB | REMARKS |
|---|---|---|---|---|---|---|---|
| | | DBL. JOIST | TRACK | | | | |
| 4" STUDS | 0" TO 10'-0" | (2)-600S162-43 | (2)-400T200-43 | (2)-400S162-43 | 400T200-43 | 5 | (2) |
| 6" STUDS | 0" TO 8'-0" | (2)-600S162-43 | (2)-400T200-43 | (2)-600S162-43 | 600T200-43 | 6 | (2) |
| | 8'-1" TO 14'-0" | (2)-600S162-54 | (2)-600T200-54 | (3)-600S162-54 | (2)-600T200-68 & 600T200-54 | - | (1), (2) |
| | 14'-1" TO 20'-0" | (2)-800S200-68 | (2)-600T200-68 | (3)-600S162-68 | (2)-600T200-68 & 600T200-68 | - | (1), (2) |

(1) REFER TO DETAIL D ABOVE FOR SILL
(2) USE UNPUNCHED STUDS

## G S3 METAL STUD WALL FRAMING

SCALE: 1" = 1'–0"

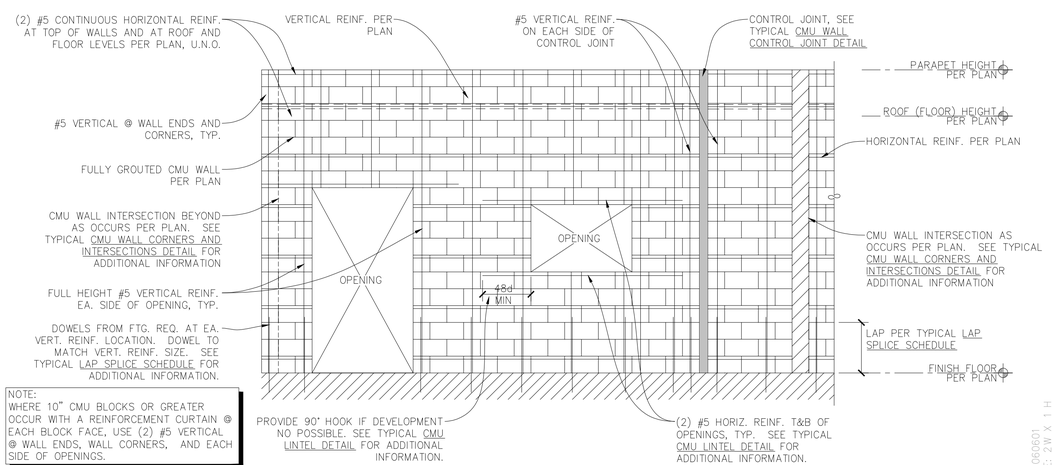


NOTE:
WHERE 10" CMU BLOCKS OR GREATER OCCUR WITH A REINFORCEMENT CURTAIN @ EACH BLOCK FACE, USE (2) #5 VERTICAL @ WALL ENDS, WALL CORNERS, AND EACH SIDE OF OPENINGS.

## H S3 CMU WALL CONSTRUCTION

SCALE: N T S

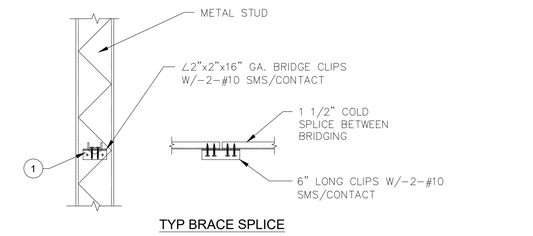


1. INSTALL BRIDGING @ 4'–0" O.C. MAX. FROM POINT OF LATERAL SUPPORT (EQUALLY SPACED BTW. POINTS OF LATERAL SUPPORT)
2. WHERE FINISH OCCURS ON BOTH SIDES FULL HT. OF WALL, PLACE BRIDGING MIDSPAN OR 8'–0" O.C. MAX.

## D S3 STUD LATERAL BRIDGING

SCALE: 3/4" = 1'–0"

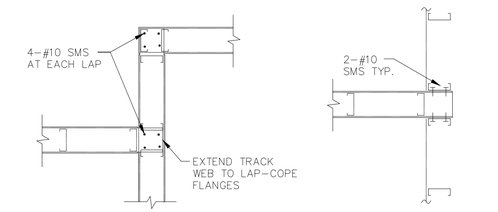


## A S3 TYPICAL TOP TRACK INTERSECTION

SCALE: 3/4" = 1'–0"

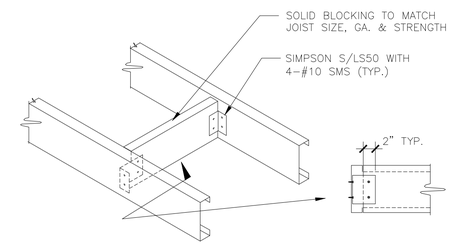


## E S3 SOLID BLOCKING @ JOISTS

SCALE: N.T.S.

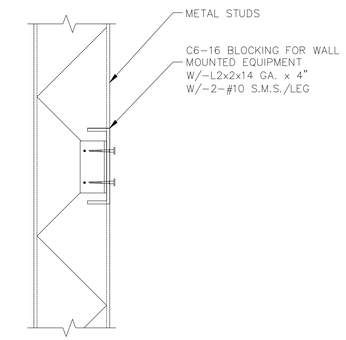


## B S3 TYPICAL STUD BACKING BLOCK

SCALE: N.T.S.

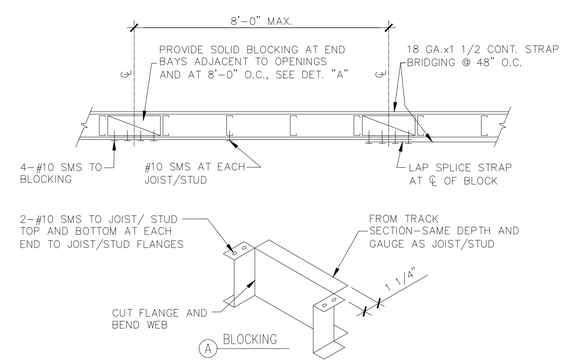


## F S3 BLOCKING / BRIDGING

SCALE: N.T.S.

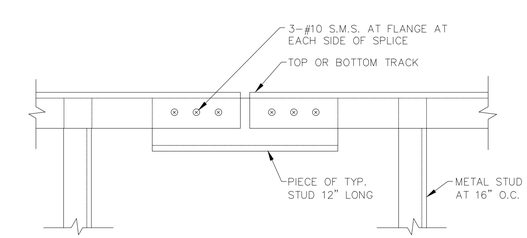


## C S3 TRACK SPLICE

SCALE: 1" = 1'–0"

| | DATE | RECORD DRAWING | DATE |
|---|---|---|---|
| DESIGNED: CZ | 4-15-23 | RESIDENT ENGINEER | |
| DRAWN: CZ | 4-15-23 | | |
| CHECKED: JH | 5-2-23 | | |

FOR RIGHT OF WAY DATA AND ACCURATE ACCESS DETERMINATION, SEE DOCUMENTS IN THE DEPARTMENT OF PUBLIC WORKS AND PLANNING.

SCALE
HORIZ 0 10' 20'
VERT 0 1' 2'

SUPERVISING ENGINEER — DATE 6/20/2024

REGISTERED PROFESSIONAL ENGINEER JOSEPH C. HARRELL No. C80424 CIVIL STATE OF CALIFORNIA

PROJECT
DEPARTMENT OF INTERNAL SERVICES
REEDLEY RADIO TOWER AND EQUIPMENT SHELTER

THE COUNTY OF FRESNO

# STRUCTURAL DETAILS

DRAWING NO. 11328 SHEET NO. S3 TOTAL 35

SIZE: 2W X 1H
TYP06001

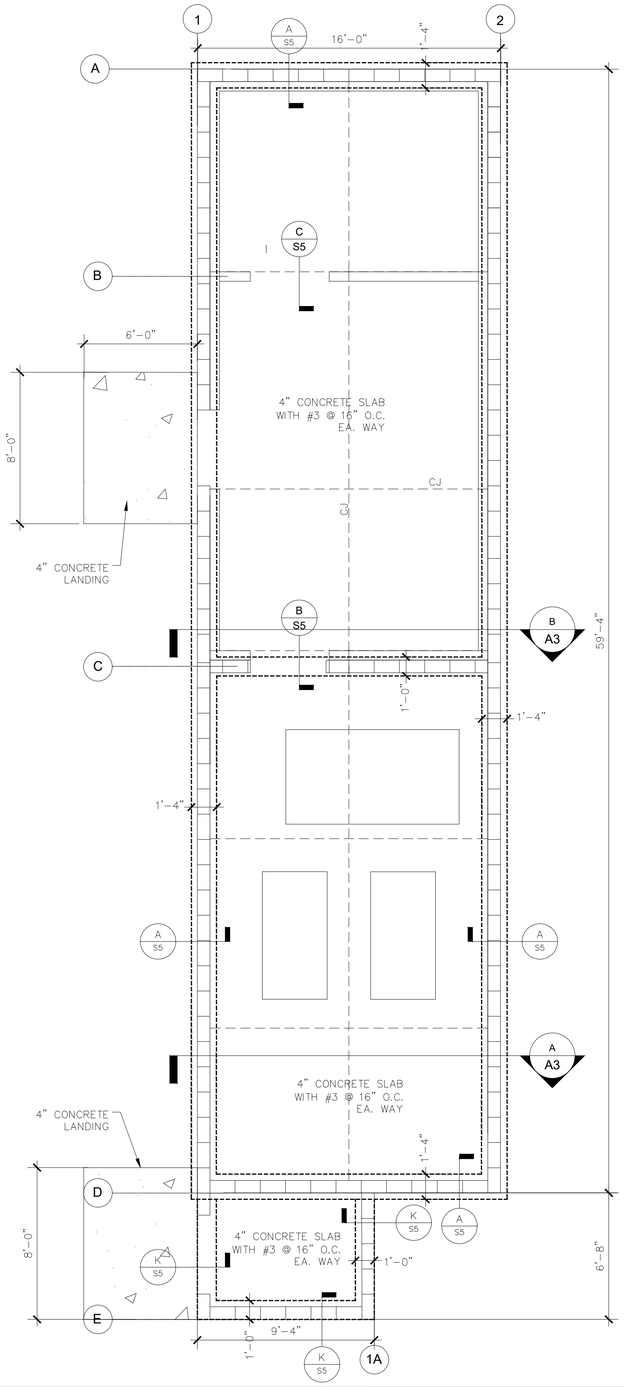


## FOUNDATION PLAN

SCALE : 1/4" = 1'-0"

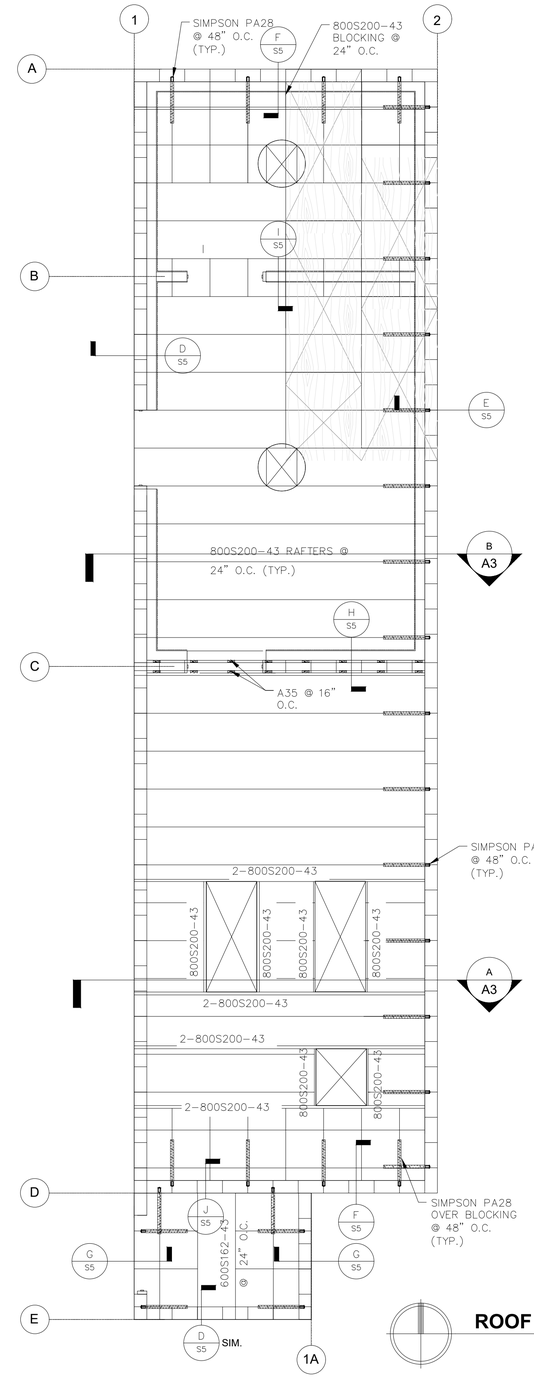


## ROOF FRAMING PLAN

SCALE : 1/4" = 1'-0"

# FOUNDATION NOTES

1. FOR GENERAL FOUNDATION NOTES, SEE SHEET S1
2. SEE GENERAL FOUNDATION DETAILS ON SHEET S2
3. ALL CONT. FOOTINGS SHALL BE 16" WIDE WITH 2-#4 CONT. TOP & BOT. UNLESS NOTED OTHERWISE
4. CONCRETE SLAB : 4" THICK (MIN) W/ #3 @ 18" O.C. EACH WAY.

   NOTE : PROVIDE VAPOR RETARDER UNDER THE CONCRETE SLAB AT BATTERY AND NETWORK ROOM
5. ALL REBAR & EMBEDDED ITEMS MUST BE TIED IN PLACE AND SECURE PRIOR TO FOUNDATION INSPECTION.
6. EQUIPMENT ANCHORAGE : VERIFY WITH EQUIPMENT SUPPLIER AND MANUFACTURER

# CMU WALL NOTES

1. ALL CMU WALLS SHALL BE 8" THICK WITH #4 VERT. BARS @ 16" O.C. AND #4 HOR. BARS @ 16" O.C.
2. ALL WALLS ARE GROUTED SOLID.
3. SEE SHEET 5 FOR ADDITIONAL TYPICAL REQUIREMENTS.

# ROOF FRAMING NOTES

1. NOTIFY THE ENGINEER OF ANY DISCREPANCIES, OMMISIONS, OR UNCLEAR DETAILS PRIOR TO PROCEEDING WITH CONSTRUCTION.
2. VERIFY ALL DIMENSIONS, OPENINGS ETC. WITH ARCHITECTURAL DRAWINGS.

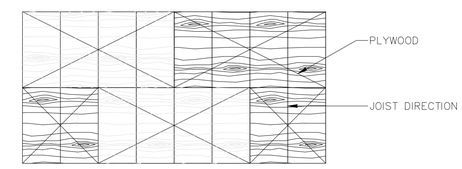


**PLYWOOD LAYOUT**

| TYPE | THICKNESS | PANEL INDEX | GRADE | WIDTH FRAMING MEMBER | CONNECTOR | | | | | REMARKS |
|---|---|---|---|---|---|---|---|---|---|---|
| | | | | | SIZE | TYPE | SPACING | | | |
| | | | | | | | BDRY | EDGE | FIELD | |
| A | 5/8" | 40/20 | COX STRUCT1 | STEEL STUD | #8 | SMS | 6 | 6 | 12 | UNBLOCKED |

1. PLYWOOD FRAMING MEMBERS AT MINIMUM WIDTH INDICATED AT ALL PLYWOOD EDGES
2. BLOCKED — USE 800S162-33 BLOCKING AT AREAS INDICATED AS BLOCKED
3. EDGE — REFERS TO PLYWOOD EDGE NAIL (P.E.N.) SPACING
4. FIELD — REFERS TO PLYWOOD FIELD NAIL SPACING
5. SMS — REPRESENTS SHEET METAL SCREWS
6. MINIMUM PANEL WIDTH SHALL BE 24"

## ROOF PLYWOOD SCHEDULE

| | DATE | RECORD DRAWING | DATE |
|---|---|---|---|
| DESIGNED: CZ | 4-15-23 | RESIDENT ENGINEER | |
| DRAWN: CZ | 4-15-23 | | |
| CHECKED: JH | 5-2-23 | | |

FOR RIGHT OF WAY DATA AND ACCURATE ACCESS DETERMINATION, SEE DOCUMENTS IN THE DEPARTMENT OF PUBLIC WORKS AND PLANNING.

SCALE
HORIZ 0 10' 20'
VERT 0 1' 2'

SUPERVISING ENGINEER

6/20/2024
DATE

REGISTERED PROFESSIONAL ENGINEER JOSEPH C. HARRELL No. C80424 CIVIL STATE OF CALIFORNIA

PROJECT

DEPARTMENT OF INTERNAL SERVICES
REEDLEY RADIO TOWER AND EQUIPMENT SHELTER

THE COUNTY OF FRESNO

**ROOF FRAMING PLAN**
**FOUNDATION PLAN**

DRAWING NO. **11328** SHEET NO. **S4** TOTAL **35**

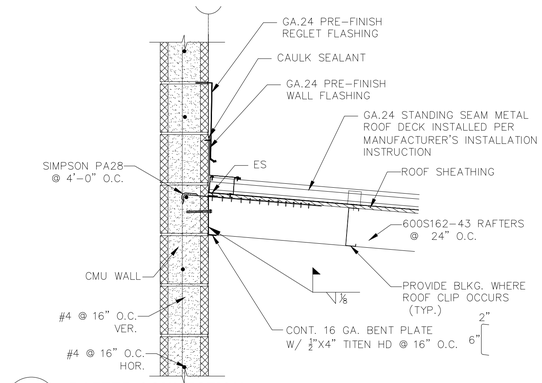


J S5 **RAFTER CONNECTION**

SCALE: 1" = 1'-0"

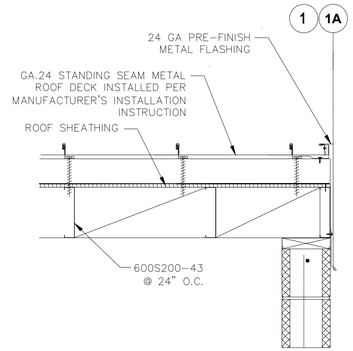


G S5 **RAKE**

SCALE: 1" = 1'-0"

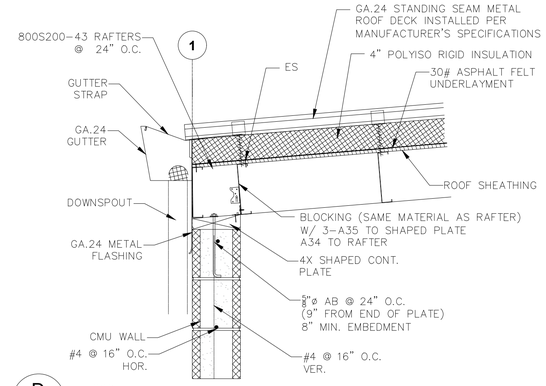


D S5 **EAVE**

SCALE: 1" = 1'-0"

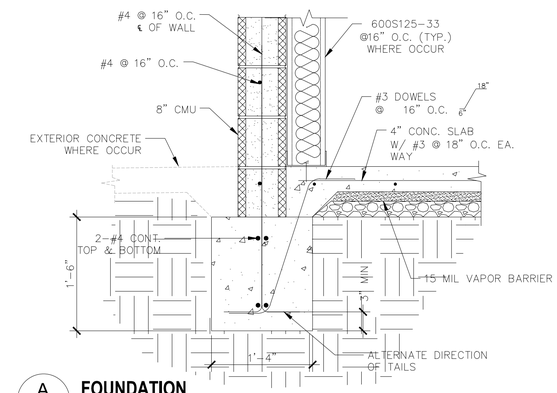


A S5 **FOUNDATION**

SCALE: 1" = 1'-0"

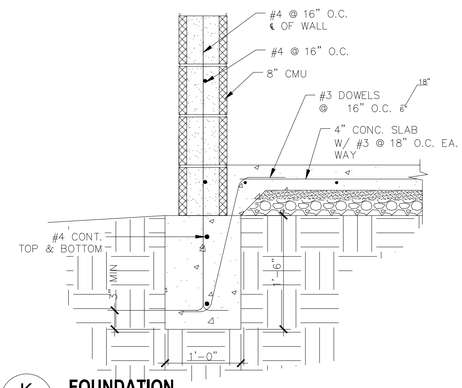


K S5 **FOUNDATION**

SCALE: 1" = 1'-0"

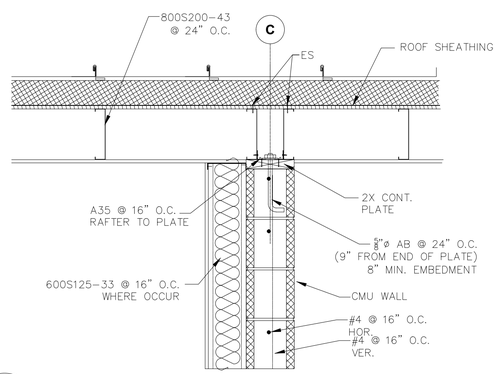


H S5 **SHEAR TRANSFER**

SCALE: 1" = 1'-0"

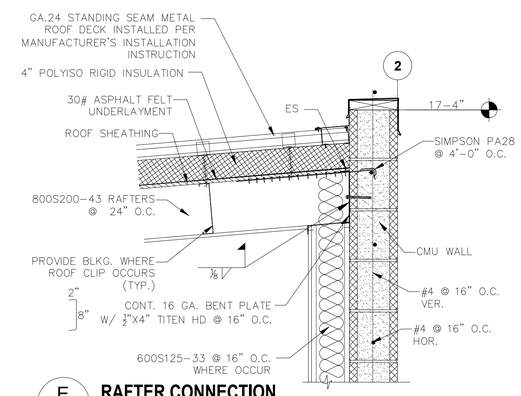


E S5 **RAFTER CONNECTION**

SCALE: 1" = 1'-0"

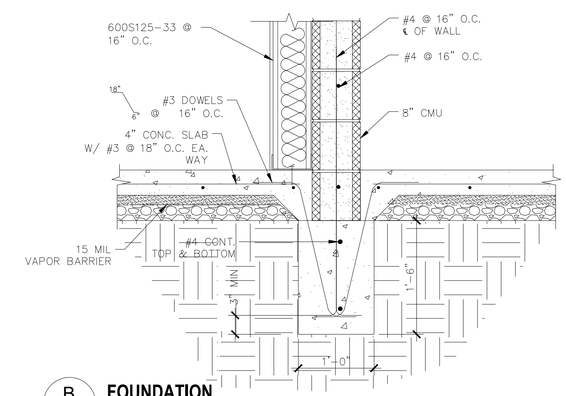


B S5 **FOUNDATION**

SCALE: 1" = 1'-0"

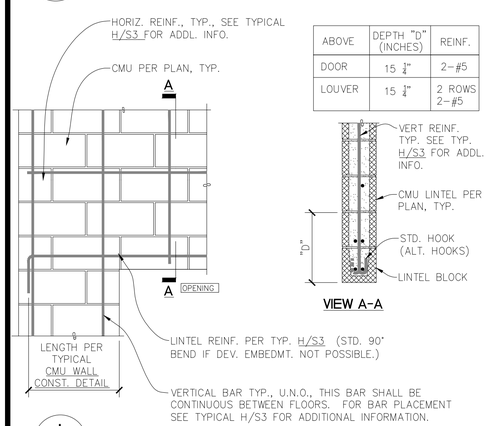


| ABOVE | DEPTH "D" (INCHES) | REINF. |
|---|---|---|
| DOOR | 15 3/4" | 2-#5 |
| LOUVER | 15 3/4" | 2 ROWS 2-#5 |

I S5

TYP060005 1

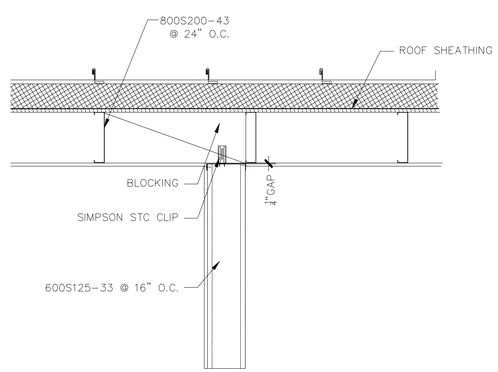


I S5 **NON-BEARING WALL**

SCALE: 1" = 1'-0"

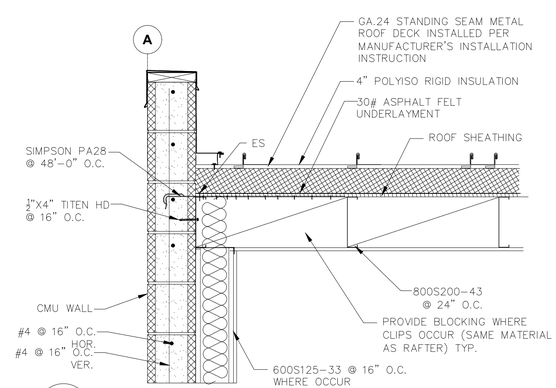


F S5 **RAKE**

SCALE: 1" = 1'-0"

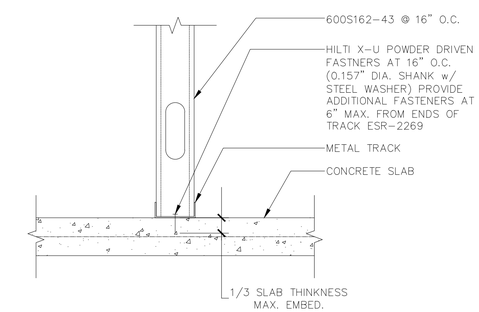


C S5 **INTERIOR WALL AT SLAB**

SCALE: 1 1/2" = 1'-0"

| | DATE | RECORD DRAWING | |
|---|---|---|---|
| DESIGNED: CZ | 4-15-23 | RESIDENT ENGINEER | DATE |
| DRAWN: CZ | 4-15-23 | | |
| CHECKED: JH | 5-2-23 | | |

FOR RIGHT OF WAY DATA AND ACCURATE ACCESS DETERMINATION, SEE DOCUMENTS IN THE DEPARTMENT OF PUBLIC WORKS AND PLANNING.

SCALE

HORIZ 0 10' 20'

VERT 0 1' 2'

SUPERVISING ENGINEER — DATE 6/20/2024

REGISTERED PROFESSIONAL ENGINEER JOSEPH C. HARRELL No. C80424 CIVIL STATE OF CALIFORNIA

PROJECT

DEPARTMENT OF INTERNAL SERVICES
REEDLEY RADIO TOWER AND EQUIPMENT SHELTER

THE COUNTY OF FRESNO

# STRUCTURAL DETAILS

DRAWING NO. 11328 SHEET NO. S5 TOTAL 35

# REEDLEY RADIO TOWER

WARNING
POWER LINES OVERHEAD

811 Know what's below. Call before you dig.

# REEDLEY CA

## LEGEND

| SYMBOL | DESCRIPTION |
|---|---|
| AFF | ABOVE FINISHED FLOOR |
| AFG | ABOVE FINISHED GRADE |
| F&I | FURNISH AND INSTALL |
| FBO | FURNISHED BY OTHERS |
| FLA | FULL LOAD AMPS |
| GFI OR GFCI | GROUND FAULT CIRCUIT INTERRUPTER |
| TBB | TELEPHONE BACKBOARD |
| UON | UNLESS OTHERWISE NOTED |
| WP | WEATHERPROOF CONSTRUCTION |
| AG | ABOVE GROUND |
| N | NEW |
| E | EXISTING |
| F | FUTURE |
| F&I | FURNISH & INSTALL |
| R | REPLACE |
| RL | RELOCATE |
| M | MODIFY |
| UG | UNDERGROUND |
| XXX | A/C AIR CONDITIONER |
| | AC AIR COMPRESSOR |
| XXX ### | AFS AIR FLOW SENSOR |
| CIT | CHLORINE RESIDUAL ANALYZER |
| CMP | CHLORINE METERING PUMP |
| DPT | DIFFERENTIAL PRESSURE TRANSMITTER |
| ES | E-STOP |
| FIT | FLOW INDICATING TRANSMITTER |
| FS | FLOAT SWITCH |
| HLS | HIGH LEVEL SWITCH |
| HPS | HIGH PRESSURE SWITCH |
| LKS OR LS | LEAK SENSOR |
| LLS | LOW LEVEL SWITCH |
| LIT | LEVEL INDICATING TRANSMITTER |
| MOV | MOTOR OPERATED VALVE |
| PIT | PRESSURE INDICATING TRANSMITTER |
| PS | PRESSURE SWITCH |
| RLS | RADAR LEVEL SENSOR |
| SV | SOLENOID VALVE |
| ULS | ULTRASONIC LEVEL SENSOR |
| ZS | ZERO SPEED SWITCH |

| SYMBOL | DESCRIPTION |
|---|---|
| S | SINGLE POLE SWITCH @ +48" TO TOP OF BOX, UON |
| $S_3$ | THREE WAY SWITCH @ +48" TO TOP OF BOX, UON |
| $S_4$ | FOUR WAY SWITCH @ +48" TO TOP OF BOX, UON |
| $S_M$ | WALL SWITCH WITH INTEGRAL OCCUPANCY SENSOR @ +48" TO TOP OF BOX, UON |
| $S^M$ | MOTOR RATED SWITCH @ +48" TO TOP OF BOX, UON |
| $S_D$ | SINGLE POLE SWITCH WITH DIMMER @ +48" TO TOP OF BOX, UON |
| OS | OCCUPANCY/MOTION SENSOR |
| TS | THERMOSTAT |
| | ELECTRICAL PANEL PER PLANS |
| | LIGHTING PANEL PER PLANS |
| | ELECTRICAL GUTTER BOX PER PLANS |
| | PANEL CLEARANCE AREA |
| X ## | CIRCUIT HOMERUN, DESIGNATES PANEL "X" & CIRCUIT # |
| | CONDUIT NEW, ABOVE GROUND |
| | CONDUIT NEW, IN FLOOR/UNDERGROUND |
| E | CONDUIT EXISTING, UNDERGROUND |
| E | CONDUIT EXISTING, ABOVE GROUND |
| G | UFER GROUND |
| | CONDUIT RUN - STUBBED, CAPPED AND LABELED |
| OR | FLEXIBLE CONDUIT |
| 19 OR ## | CONDUIT NUMBER |
| G | GROUND CONNECTION TO EQUIPMENT |
| | CADWELD OR EXOTHERMIC WELD PER PLANS |
| A | LIGHTING FIXTURE; LETTER INDICATES FIXTURE TYPE PER FIXTURE SCHEDULE |
| B | RECESSED LIGHTING FIXTURE; LETTER INDICATES FIXTURE TYPE PER FIXTURE SCHEDULE |
| AE | LIGHTING FIXTURE EQUIPPED WITH EMERGENCY BATTERY PACK; LETTER INDICATES FIXTURE TYPE PER FIXTURE SCHEDULE |
| C | LIGHTING FIXTURE; LETTER INDICATES FIXTURE TYPE PER FIXTURE SCHEDULE |
| CE | LIGHTING FIXTURE EQUIPPED WITH EMERGENCY BATTERY PACK; LETTER INDICATES FIXTURE TYPE PER FIXTURE SCHEDULE |
| X E | EXIT LIGHT; LETTER INDICATES FIXTURE TYPE PER FIXTURE SCHEDULE |
| D | POLE MOUNTED LIGHTING FIXTURE; LETTER INDICATES FIXTURE TYPE PER FIXTURE SCHEDULE |
| X | LIGHTING FIXTURE; BEACON TYPE PER FIXTURE SCHEDULE |
| ## ## | DESIGNATES MECHANICAL EQUIPMENT |
| # | DESIGNATES NOTES |
| # | PULLBOX |
| | UTILITY POLE |

| SYMBOL | DESCRIPTION |
|---|---|
| | FLUSH MOUNTED FLOOR BOX |
| | SINGLE RECEPTACLE IN WALL @ +18", UON SUBSCRIPT 'AC' INDICATES ABOVE COUNTER |
| | DUPLEX RECEPTACLE IN WALL @ +18", UON SUBSCRIPT 'AC' INDICATES ABOVE COUNTER |
| GFI | DUPLEX GFI RECEPTACLE IN WALL @ +18", UON SUBSCRIPT 'AC' INDICATES ABOVE COUNTER |
| | CONTROLLED OUTLET @ +18", UON |
| WP | WEATHER PROOF DUPLEX GFI RECEPTACLE IN WALL @ +18", UON |
| WP|UC | WEATHER PROOF WHILE IN USE COVER DUPLEX GFI RECEPTACLE IN WALL @ +18", UON |
| | DUPLEX ISOLATED GROUND RECEPTACLE IN WALL @ +18", UON |
| | QUADRUPLEX RECEPTACLE IN WALL @ +18", UON |
| | 250V SINGLE PHASE OUTLET IN WALL @ +18", UON |
| | DUPLEX RECEPTACLE IN CEILING |
| J | JUNCTION BOX |
| | DISCONNECT SWITCH, SIZED PER LOAD SERVED |
| | ELECTRIC MOTOR |
| VF | EXHAUST FAN |

## SHEET INDEX

| EPS DWG Number | Title | Date | Rev. |
|---|---|---|---|
| E01 | Legend & Sheet Index | 5/3/2024 | 0 |
| E02 | Single Line Diagram | 4/18/2024 | 0 |
| E03 | Electrical Site Plan | 4/18/2024 | 0 |
| E04 | Grounding Plan | 5/3/2024 | 0 |
| E05 | Grounding Plan | 5/3/2024 | 0 |
| E06 | Lighting Plan | 4/18/2024 | 0 |
| E07 | Building Power Plan | 4/18/2024 | 0 |
| E08 | HVAC Plan | 4/18/2024 | 0 |
| E09 | Grounding Details | 5/3/2024 | 0 |
| E10 | Grounding Details | 5/3/2024 | 0 |
| E11 | Electrical Details | 5/3/2024 | 0 |
| E12 | Survey Site Plan | 9/6/2023 | 0 |
| E13 | Title 24 | 9/14/2023 | 0 |

## SCOPE OF WORK

LOW VOLTAGE ELECTRICAL POWER SYSTEM INSTALLATION FOR A TELECOMMUNICATION BUILDING FOR THE COUNTY OF FRESNO RADIO GROUP THROUGH COUNTY OF FRESNO PUBLIC WORKS DEPARTMENT.

## NOTES:

1. CONDUIT ROUTING SHOWN AS DIAGRAMMATIC. DOES NOT INDICATE TRENCH AND CONDUIT LAYOUT.

## ELECTRICAL CONSTRUCTION MATERIAL NOTES

**PER CEC 110.12 ELECTRICAL INSTALLATION TO BE NEAT AND WORKMANLIKE. SEE NECA 1 STANDARD FOR GOOD WORKMANSHIP AND NECA 101 STANDARD FOR INSTALLING STEEL CONDUIT FOR REQUIREMENTS.**

**ABOVE GRADE** - HOT DIPPED GALVANIZED RIGID STEEL CONDUIT TO BE USED FOR ALL EXTERIOR AND INTERIOR LOCATIONS ABOVE GRADE OR ELSEWHERE SHOWN ON PLANS. ALL RIGID CONDUIT AND FITTINGS TO BE THREADED. USE OF SET SCREW OR COMPRESSION TYPE CONNECTOR IS PROHIBITED. MEYERS HUBS TO BE USED ON ALL EXTERIOR PANEL CONNECTIONS.

**BELOW GRADE** - RIGID PVC NONMETALLIC CONDUIT SCHEDULE 40 TO BE USED FOR ALL UNDERGROUND LOCATIONS AND BELOW VAPOR BARRIER OF SLAB. NO CONDUITS SHALL BE INSTALLED TO REDUCE THE STRUCTURAL INTEGRITY OF FOOTINGS. MANDREL ALL CONDUITS PRIOR TO PULLING WIRE

**CHEMICAL BUILDINGS AND CORROSIVE ATMOSPHERES** - RIGID PVC NONMETALLIC CONDUIT SCHEDULE 80 TO BE USED FOR ALL INTERIOR LOCATIONS ABOVE GRADE IN CHEMICAL BUILDINGS AND CORROSIVE ENVIRONMENTS.

**THROUGH CONCRETE SLABS AND EXTERIOR CORROSIVE ATMOSPHERES** - PVC COATED GALVANIZED RIGID STEEL CONDUIT MINIMUM 40 MIL FACTORY COATING TO BE USED FOR ALL EXPOSED CONDUITS THROUGH CONCRETE SLABS (MINIMUM 12'' ABOVE AND BELOW SLAB) AND ALL EXTERIOR LOCATION CORROSIVE ATMOSPHERES. USE MANUFACTURERS' SPECIFIED TOOLS AND PROCEDURES FOR INSTALLATION.

**MOTORS AND SENSOR CONNECTIONS** - LIQUID TIGHT FLEXIBLE METAL CONDUIT (UV RESISTANT) TO ONLY BE USED ON CONNECTIONS TO MOTORS AND SENSORS OR TO ISOLATE VIBRATION. MAXIMUM LENGTH TO BE 30''.

**JUNCTION BOXES** - MINIMUM SIZE PER NEC. EXPOSED LOCATION, 1 AND 2 GANG TO BE CAST IRON DEVICE BOXES TYPE FS/FD SUITABLE FOR WET LOCATIONS. EXPOSED LOCATION EXTERIOR LARGER SIZES CONTINUOUS HINGE TYPE 4, CORROSIVE LOCATIONS CONTINUOUS HINGE TYPE 4X STAINLESS STEEL.

**GROUND CONNECTIONS** - GROUND CONNECTIONS TO BE EXOTHERMIC CADWELD (ALL 600 AMP OR LARGER SERVICE) OR BURNDY HYDRAULIC COMPRESSION CONNECTORS. GROUND BUS CONNECTIONS TO BE CRIMP LUG TYPE WITH BOLTED CONNECTION TO GROUND BUS.

**480 VOLT AND BELOW POWER WIRING** TO BE XHHW-2. ALL POWER CONNECTIONS TO BE TREATED WITH ANTIOXIDANT COMPOUND. ALL VFD MOTOR CABLE TO BE SHIELDED, INVERTER DUTY. SHIELD GROUNDED AT BOTH ENDS.

**CLASS 1, DIVISION 1 WIRING PER CEC 501.10A -** PVC COATED THREADED RIGID METAL CONDUIT, RIGID METAL CONDUIT OR ALUMINUM CONDUIT PER OWNER'S DIRECTION IS REQUIRED. RIGID PVC CONDUIT ENCASED IN MINIMUM 2" CONCRETE AND MINIMUM 36" BELOW GRADE IS ALLOWED PER PRIOR APPROVAL. ALL CONNECTIONS TO BE WRENCH TIGHT MINIMUM 5 THREADS ENGAGED. FLEXIBLE FITTINGS TO BE EXPLOSION PROOF PER UL 1203. INTRINSICALLY SAFE (INCAPABLE OF CAUSING IGNITION) IS ALLOWED FOR SENSORS IF ISOLATED FROM NON-INTRINSICALLY SAFE WIRING.

**CONTACT OWNER'S ELECTRICAL REPRESENTATIVE TO SCHEDULE AN ELECTRICAL PRE-CONSTRUCTION MEETING PRIOR TO COMMENCING CONSTRUCTION**

## CURRENT APPLICABLE CODES

ALL ELECTRICAL EQUIPMENT AND MATERIAL AND ITS INSTALLATION SHALL CONFORM TO THE CURRENT REQUIREMENTS OF THE FOLLOWING AUTHORITIES:

**CALIFORNIA CODE OF REGULATIONS,** TITLE 8, INDUSTRIAL SAFETY
**CALIFORNIA CODE OF REGULATIONS,** TITLE 19, PUBLIC SAFETY
**CALIFORNIA CODE OF REGULATIONS,** TITLE 24, PART 1 , ADMINISTRATIVE REGULATIONS
**CALIFORNIA BUILDING CODE (CBC),** TITLE 24, PART 2
**CALIFORNIA ELECTRICAL CODE (CEC),** TITLE 24, PART 3
**CALIFORNIA MECHANICAL CODE (CMC),** TITLE 24, PART 4
**CALIFORNIA PLUMBING CODE (CPC),** TITLE 24, PART 5
**CALIFORNIA ENERGY CODE,** TITLE 24, PART 6
**CALIFORNIA FIRE CODE (CFC),** TITLE 24
**REGULATIONS OF THE DIVISION OF THE STATE ARCHITECT OF THE STATE OF CALIFORNIA**, OFFICE OF REGULATION SERVICES
**LOCAL UTILITY GAS AND ELECTRICAL SERVICE REQUIREMENTS**
**NOTE:**
WHERE TWO OR MORE CODES CONFLICT, THE MOST RESTRICTIVE SHALL APPLY. NOTHING IN THESE PLANS AND SPECIFICATIONS SHALL BE CONSTRUCTED TO PERMIT WORK NOT CONFORMING TO APPLICABLE CODES.

## ARC FLASH LABELING

COMPLIANCE WITH CEC 110.16 AND NESC RULE 410 WILL BE PROVIDED.
ELECTRICAL EQUIPMENT THAT IS LIKELY TO REQUIRE EXAMINATION ADJUSTMENT, SERVICING, OR MAINTENANCE WHILE ENERGIZED, WILL BE FIELD OR FACTORY MARKED TO WARN QUALIFIED PERSONS OF POTENTIAL ELECTRIC ARC HAZARDS. THE MARKING SHALL MEET THE REQUIREMENTS OF CEC 110.21 AND NFPA 130 AND SHALL BE LOCATED SO AS TO BE CLEARLY VISIBLE TO QUALIFIED PERSONS BEFORE EXAMINATION, ADJUSTED, SERVICING MAINTENANCE OF THE EQUIPMENT.
COORDINATION AND ARC FLASH STUDY TO BE COMPLETED AFTER PROJECT INSTALLATION TO VERIFY INSTALLED EQUIPMENT, POWER CABLE TYPE, AND POWER CABLE TYPE.
ARC FLASH, SHORT CIRCUIT, AND COORDINATION STUDY TO BE PERFORMED, STAMPED, AND SIGNED BY A LICENSED CALIFORNIA PROFESSIONAL ELECTRICAL ENGINEER AND PER NFPA 130.
ARC FLASH, SHORT CIRCUIT, AND COORDINATION STUDY MUST BE REVIEWED AT MOST EVERY 5 YEARS PER NFPA 130.5(H).
ARC FLASH, SHORT CIRCUIT, AND COORDINATION STUDY MUST BE PERFORMED WITH ANY CHANGES TO THE ELECTRICAL SYSTEM PER NFPA 130.

**Issued For Construction**
JOB:FC-PW041.2
DATE: April 2024
DSGN: AR/WCH
DRWN: WCH
UPD: WCH
FILE: E01-Legend & Sheet Index-
PLOT: 5/7/2024 12:46 PM

REGISTERED PROFESSIONAL ENGINEER ABDUR REHMAN No. 22090 ELECTRICAL STATE OF CALIFORNIA
DATE: 5/7/2024


**ELECTRICAL POWER SYSTEMS**
ENGINEERING SOLUTIONS
2187 Herndon Ave #102 Clovis CA 93611 (559) 221-7230
JOE PREVENDAR P.E. CA EE 16581 joe@epsfresno.com
ABDUR REHMAN P.E. CA EE 22090 abdur@epsfresno.com




| | DATE | RECORD DRAWING | DATE |
|---|---|---|---|
| DESIGNED: | | RESIDENT ENGINEER | |
| DRAWN: | | | |
| CHECKED: | | | |

FOR RIGHT OF WAY DATA AND ACCURATE ACCESS DETERMINATION, SEE DOCUMENTS IN THE DEPARTMENT OF PUBLIC WORKS AND PLANNING.

SCALE
HORIZ 0 10' 20'
VERT 0 1' 2'

#### DATE

PROJECT
DEPARTMENT OF INTERNAL SERVICES
REEDLEY RADIO TOWER EQUIPMENT SHELTER

THE COUNTY OF FRESNO

DEPARTMENT OF PUBLIC WORKS AND PLANNING
LEGEND & SHEET INDEX
DRAWING NO. ##### SHEET NO. E01 TOTAL 12

## PANEL 'DSP'

600 AMPS 120/208V 3PH 4W 65kAIC NEMA 1G

| CKT | DESCRIPTION / LOCATION | BRKR | PLS | Aph | Bph | Cph |
|---|---|---|---|---|---|---|
| 1 | ODU-1 3 Tons | 50 | 2 | 36.00 | | |
| 3 | " " " " | " | " | | 36.00 | |
| 5 | Space | - | - | | | 0.00 |
| 7 | ODU-2 14 Tons | 90 | 3 | 59.00 | | |
| 9 | " " " " | " | " | | 59.00 | |
| 11 | " " " " | " | " | | | 59.00 |
| 13 | ODU-3 14 Tons | 90 | 3 | 59.00 | | |
| 15 | " " " " | " | " | | 59.00 | |
| 17 | " " " " | " | " | | | 59.00 |
| 19 | Spare | 20 | 1 | 0.00 | | |
| 21 | Spare | 20 | 1 | | 0.00 | |
| 23 | Spare | 20 | 1 | | | 0.00 |
| 25 | Spare | 20 | 1 | 0.00 | | |
| 27 | Spare | 20 | 1 | | 0.00 | |
| 29 | Spare | 20 | 1 | | | 0.00 |
| 31 | Spare | 20 | 1 | 0.00 | | |
| 33 | Spare | 20 | 1 | | 0.00 | |
| 35 | Spare | 20 | 1 | | | 0.00 |
| 37 | Panel LP Feeder | 100 | 3 | 52.85 | | |
| 39 | " " " " | " | " | | 61.30 | |
| 41 | " " " " | " | " | | | 54.82 |
| 2 | Blank | - | - | 0.00 | | |
| 4 | Battery Charger #1 | 40 | 2 | | 27.50 | |
| 6 | " " " " " | " | " | | | 27.50 |
| 8 | Blank | - | - | 0.00 | | |
| 10 | Battery Charger #2 | 40 | 2 | | 27.50 | |
| 12 | " " " " " | " | " | | | 27.50 |
| 14 | Battery Charger #3 | 40 | 2 | 27.50 | | |
| 16 | " " " " " | " | " | | 27.50 | |
| 18 | Blank | - | - | | | 0.00 |
| 20 | Battery Charger #4 | 40 | 2 | 27.50 | | |
| 22 | " " " " " | " | " | | 27.50 | |
| 24 | Spare | 20 | 1 | | | 0.00 |
| 26 | Spare | 20 | 1 | 0.00 | | |
| 28 | Spare | 20 | 1 | | 0.00 | |
| 30 | Spare | 20 | 1 | | | 0.00 |
| 32 | Spare | 20 | 1 | 0.00 | | |
| 34 | Spare | 20 | 1 | | 0.00 | |
| 36 | Spare | 20 | 1 | | | 0.00 |
| 38 | Panel IDU Feeder | 100 | 3 | 16.14 | | |
| 40 | " " " " | " | " | | 27.84 | |
| 42 | " " " " | " | " | | | 8.20 |
| PANEL CONNECTED AMPERAGE LOAD / PHASE | | | | 278.0 | 353.1 | 236.0 |
| PANEL CONNECTED LOAD (3PHASE) | | Amps 289.1 | | KW 104.06 | | |

## PANEL 'IDU'

100 AMPS 120/208V 3PH 4W 42kAIC NEMA 1G

| CKT | DESCRIPTION / LOCATION | BRKR | PLS | Aph | Bph | Cph |
|---|---|---|---|---|---|---|
| 1 | IDU-1A | 20 | 2 | 0.63 | | |
| 3 | " " | " | " | | 0.63 | |
| 5 | Blank | - | - | | | 0.00 |
| 7 | IDU-1B | 20 | 2 | 0.63 | | |
| 9 | " " | " | " | | 0.63 | |
| 11 | Blank | - | - | | | 0.00 |
| 13 | IDU-2A | 20 | 2 | 8.20 | | |
| 15 | " " | " | " | | 8.20 | |
| 17 | Blank | - | - | | | 0.00 |
| 19 | Blank | - | - | 0.00 | | |
| 21 | IDU-2B | 20 | 2 | | 8.20 | |
| 23 | " " | " | " | | | 8.20 |
| 25 | Primary Rack Room Exhaust Fan | 20 | 1 | 2.90 | | |
| 27 | Battery Room Exhaust Fan | 20 | 1 | | 6.40 | |
| 29 | Spare | 20 | 1 | | | 0.00 |
| 31 | Spare | 20 | 1 | 0.00 | | |
| 33 | Spare | 20 | 1 | | 0.00 | |
| 35 | Spare | 20 | 1 | | | 0.00 |
| 37 | Spare | 20 | 1 | 0.00 | | |
| 39 | Spare | 20 | 1 | | 0.00 | |
| 41 | Spare | 20 | 1 | | | 0.00 |
| 2 | IDU-3A | 20 | 2 | 0.63 | | |
| 4 | " " | " | " | | 0.63 | |
| 6 | Blank | - | - | | | 0.00 |
| 8 | IDU-3B | 20 | 2 | 0.63 | | |
| 10 | " " | " | " | | 0.63 | |
| 12 | Blank | - | - | | | 0.00 |
| 14 | IDU-3C | 20 | 2 | 0.63 | | |
| 16 | " " | " | " | | 0.63 | |
| 18 | Blank | - | - | | | 0.00 |
| 20 | IDU-3D | 20 | 2 | 0.63 | | |
| 22 | " " | " | " | | 0.63 | |
| 24 | Blank | - | - | | | 0.00 |
| 26 | IDU-3E | 20 | 2 | 0.63 | | |
| 28 | " " | " | " | | 0.63 | |
| 30 | Blank | - | - | | | 0.00 |
| 32 | IDU-3F | 20 | 2 | 0.63 | | |
| 34 | " " | " | " | | 0.63 | |
| 36 | Blank | - | - | | | 0.00 |
| 38 | Blank | - | - | 0.00 | | |
| 40 | Blank | - | - | | 0.00 | |
| 42 | Blank | - | - | | | 0.00 |
| PANEL CONNECTED AMPERAGE LOAD / PHASE | | | | 16.1 | 27.8 | 8.2 |
| PANEL CONNECTED LOAD (3PHASE) | | Amps 17.4 | | KW 6.26 | | |

## PANEL 'LP'

100 AMPS 120/208V 3PH 4W 42kAIC NEMA 1G

| CKT | DESCRIPTION / LOCATION | BRKR | PLS | Aph | Bph | Cph |
|---|---|---|---|---|---|---|
| 1 | Rack #1 Receptacle #1 | 20 | 1 | 8.30 | | |
| 3 | Rack #1 Receptacle #2 | 20 | 1 | | 8.30 | |
| 5 | Rack #2 Receptacle #3 | 20 | 1 | | | 8.30 |
| 7 | Rack #2 Receptacle #4 | 20 | 1 | 8.30 | | |
| 9 | Rack #3 Receptacle #5 | 20 | 1 | | 8.30 | |
| 11 | Rack #3 Receptacle #6 | 20 | 1 | | | 8.30 |
| 13 | Rack #4 Receptacle #7 | 20 | 1 | 8.30 | | |
| 15 | Rack #4 Receptacle #8 | 20 | 1 | | 8.30 | |
| 17 | Rack #5 Receptacle #9 | 20 | 1 | | | 8.30 |
| 19 | Rack #5 Receptacle #10 | 20 | 1 | 8.30 | | |
| 21 | Rack #6 Receptacle #11 | 20 | 1 | | 8.30 | |
| 23 | Rack #6 Receptacle #12 | 20 | 1 | | | 8.30 |
| 25 | Rack #7 Receptacle #13 | 20 | 1 | 8.30 | | |
| 27 | Rack #7 Receptacle #14 | 20 | 1 | | 8.30 | |
| 29 | Spare | 20 | 1 | | | 0.00 |
| 31 | Spare | 20 | 1 | 0.00 | | |
| 33 | Spare | 20 | 1 | | 0.00 | |
| 35 | Spare | 20 | 1 | | | 0.00 |
| 37 | Spare | 20 | 1 | 0.00 | | |
| 39 | Spare | 20 | 1 | | 0.00 | |
| 41 | Saphire Control Panel | 20 | 1 | | | 2.00 |
| 2 | Tower Strobe Light 1 & Controller | 20 | 1 | 1.83 | | |
| 4 | Tower Strobe Light 2 & Controller | 20 | 1 | | 1.83 | |
| 6 | Exterior Building Lighting Fixtures | 20 | 1 | | | 2.13 |
| 8 | Primary Rack Room Lighting Fixtures | 20 | 1 | 1.27 | | |
| 10 | Primary Rack Room Receptacles | 20 | 1 | | 2.00 | |
| 12 | Battery Room Lighting Fixtures | 20 | 1 | | | 0.49 |
| 14 | Battery Room Receptacles | 20 | 1 | 2.00 | | |
| 16 | Secondary Rack Room Lighting Fixtures | 20 | 1 | | 0.97 | |
| 18 | Secondary Rack Room Receptacles | 20 | 1 | | | 2.00 |
| 20 | Electrical Utility Room Fixtures | 20 | 1 | 0.25 | | |
| 22 | Spare | 20 | 1 | | 0.00 | |
| 24 | Spare | 20 | 1 | | | 0.00 |
| 26 | Spare | 20 | 1 | 0.00 | | |
| 28 | Spare | 20 | 1 | | 0.00 | |
| 30 | Spare | 20 | 1 | | | 0.00 |
| 32 | Spare | 20 | 1 | 0.00 | | |
| 34 | Spare | 20 | 1 | | 0.00 | |
| 36 | Spare | 20 | 1 | | | 0.00 |
| 38 | Generator Battery Charger | 20 | 1 | 6.0 | | |
| 40 | Generator Jacket Water Heater | 30 | 2 | | 15.0 | |
| 42 | " " " " " " | " | " | | | 15.0 |
| PANEL CONNECTED AMPERAGE LOAD / PHASE | | | | 52.9 | 61.3 | 54.8 |
| PANEL CONNECTED LOAD (3 PHASE) | | Amps 56.3 | | KW 20.28 | | |

## PANEL 'LP' LOAD LIST

| Item | Name | Voltage | CB | FLA |
|---|---|---|---|---|
| 1 | Rack #1 Receptacle #1 | 120 | 20 | 8.3 |
| 2 | Rack #1 Receptacle #2 | 120 | 20 | 8.3 |
| 3 | Rack #2 Receptacle #3 | 120 | 20 | 8.3 |
| 4 | Rack #2 Receptacle #4 | 120 | 20 | 8.3 |
| 5 | Rack #3 Receptacle #5 | 120 | 20 | 8.3 |
| 6 | Rack #3 Receptacle #6 | 120 | 20 | 8.3 |
| 7 | Rack #4 Receptacle #7 | 120 | 20 | 8.3 |
| 8 | Rack #4 Receptacle #8 | 120 | 20 | 8.3 |
| 9 | Rack #5 Receptacle #9 | 120 | 20 | 8.3 |
| 10 | Rack #5 Receptacle #10 | 120 | 20 | 8.3 |
| 11 | Rack #6 Receptacle #11 | 120 | 20 | 8.3 |
| 12 | Rack #6 Receptacle #12 | 120 | 20 | 8.3 |
| 13 | Rack #7 Receptacle #13 | 120 | 20 | 8.3 |
| 14 | Rack #7 Receptacle #14 | 120 | 20 | 8.3 |
| 15 | Tower Strobe Light 1 & Controller | 120 | 20 | 1.83 |
| 16 | Tower Strobe Light 2 & Controller | 120 | 20 | 1.83 |
| 17 | Exterior Building Lighting Fixtures | 120 | 20 | 1.07 |
| 18 | Primary Rack Room Lighting Fixtures | 120 | 20 | 0.50 |
| 19 | Primary Rack Room Receptacles | 120 | 20 | 2.00 |
| 20 | Battery Room Lighting Fixtures | 120 | 20 | 0.97 |
| 21 | Battery Room Receptacles | 120 | 20 | 2.00 |
| 22 | Secondary Rack Room Lighting Fixtures | 120 | 20 | 0.97 |
| 23 | Secondary Rack Room Receptacles | 120 | 20 | 2.00 |
| 24 | Generator Battery Charger | 120 | 20 | 6.00 |
| 25 | Generator Jacket Water Heater | 208 | 20 | 15.00 |
| | | | Average 3PH Load | 56.32 |
| | | | 25% Load Correction | 14.08 |
| | | | Total | 70.4 |

## METER/MAIN ELEVATION

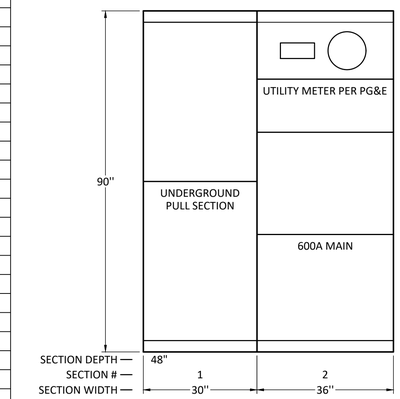


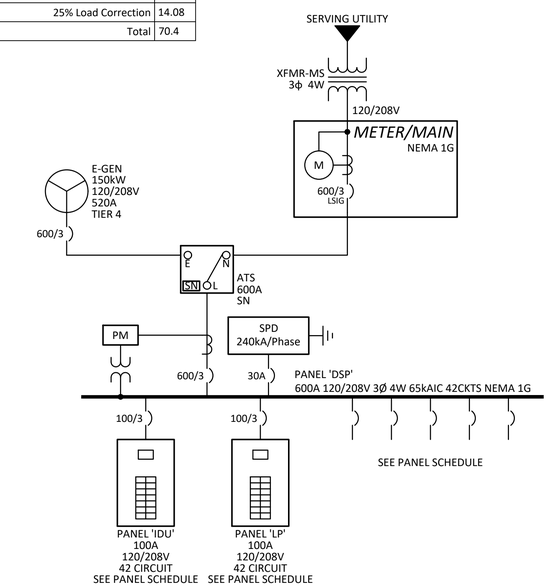


## SINGLE LINE DIAGRAM

PM - ACCUENERGY ACUVIM IIR

## PANEL DSP LOAD LIST

| Item | Name | Voltage | CB | FLA |
|---|---|---|---|---|
| 1 | Panel LP | 208 | 100 | 56.3 |
| 2 | Panel IDU | 208 | 100 | 17.4 |
| 3 | ODU-1 14 Tons | 208 | 90 | 59.0 |
| 4 | ODU-2 14 Tons | 208 | 90 | 59.0 |
| 5 | ODU-3 3 Tons | 208 | 50 | 36.0 |
| 6 | Battery Charger 1 | 208 | 40 | 27.5 |
| 7 | Battery Charger 2 | 208 | 40 | 27.5 |
| 8 | Battery Charger 3 | 208 | 40 | 27.5 |
| 9 | Battery Charger 4 | 208 | 40 | 27.5 |
| | | | Average 3PH Load | 289 |
| | | | 25% Load Correction | 72.3 |
| | | | Total | 361 |

## PANEL IDU LOAD LIST

| Item | Name | Voltage | CB | FLA |
|---|---|---|---|---|
| 1 | IDU-1A | 208 | 20 | 0.63 |
| 2 | IDU-1B | 208 | 20 | 0.63 |
| 3 | IDU-2A | 208 | 20 | 8.20 |
| 4 | IDU-2B | 208 | 20 | 8.20 |
| 5 | IDU-3A | 208 | 20 | 0.63 |
| 6 | IDU-3B | 208 | 20 | 0.63 |
| 7 | IDU-3C | 208 | 20 | 0.63 |
| 8 | IDU-3D | 208 | 20 | 0.63 |
| 9 | IDU-3E | 208 | 20 | 0.63 |
| 10 | IDU-3F | 208 | 20 | 0.63 |
| 11 | Battery Room Exhaust Fan | 120 | 20 | 6.40 |
| 12 | Primary Rack Room Exhaust Fan | 120 | 20 | 2.90 |
| | | | Average 3PH Load | 17.4 |
| | | | 25% Load Correction | 4.35 |
| | | | Total | 21.7 |

## LOAD CALCULATIONS

3 Phase 120 / 208 Voltage

| LOAD DESCRIPTION | | LOAD | |
|---|---|---|---|
| Panel DSP | | 289.1 | A |
| | TOTAL LOAD | 289.05 | A |
| LOAD CORRECTION FACTORS | x 25% = | 72.26 | A |
| | SERVICE MINIMUM SIZE | 361.31 | A |
| | REQUIRED UTILITY SERVICE SIZE | 600 | AMP |

**Issued For Construction**

JOB: FC-PW041.2

DATE: April 2024

DSGN: AR/WCH
DRWN: WCH
UPD: WCH
FILE: E02-Single Line Diagram-
PLOT: 5/7/2024 12:53 PM

REGISTERED PROFESSIONAL ENGINEER ABDUR REHMAN No. 22090 ELECTRICAL STATE OF CALIFORNIA

DATE: 5/7/2024


**ELECTRICAL POWER SYSTEMS**
ENGINEERING SOLUTIONS
2187 Herndon Ave #102 Clovis CA 93611 (559) 221-7230
JOE PREVENDAR P.E. CA EE 16581 joe@epsfresno.com
ABDUR REHMAN P.E. CA EE 22090 abdur@epsfresno.com




| | DATE | RECORD DRAWING | DATE |
|---|---|---|---|
| DESIGNED: | | RESIDENT ENGINEER | |
| DRAWN: | | | |
| CHECKED: | | | |

FOR RIGHT OF WAY DATA AND ACCURATE ACCESS DETERMINATION, SEE DOCUMENTS IN THE DEPARTMENT OF PUBLIC WORKS AND PLANNING.

SCALE
HORIZ 0 10' 20'
VERT 0 1' 2'

#### DATE

PROJECT
DEPARTMENT OF INTERNAL SERVICES
REEDLEY RADIO TOWER EQUIPMENT SHELTER

THE COUNTY OF FRESNO

DEPARTMENT OF PUBLIC WORKS AND PLANNING
SINGLE LINE DIAGRAM

DRAWING NO. ##### SHEET NO. E02 TOTAL 12

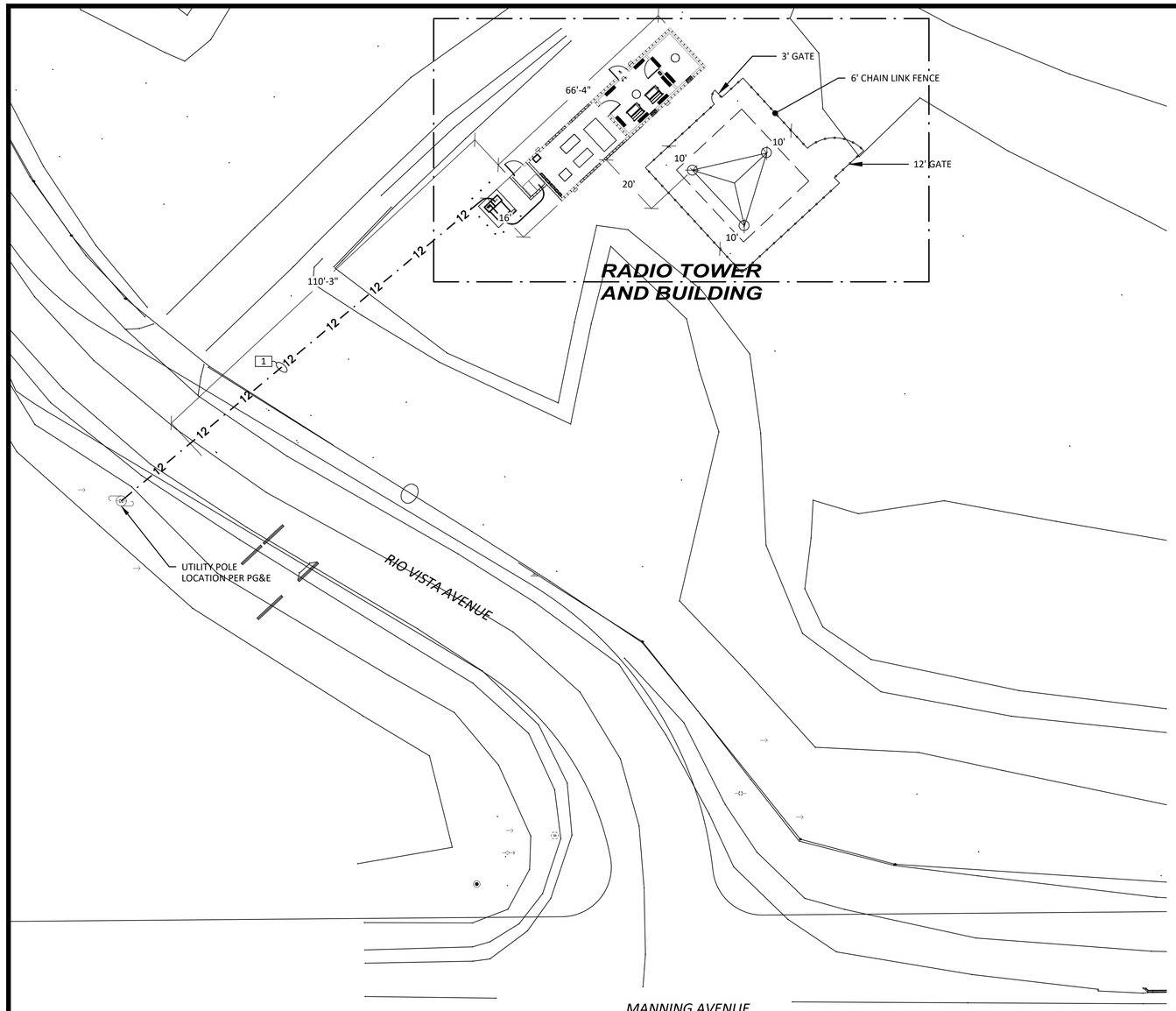


## ELECTRICAL SITE PLAN

SCALE: 1" = 20'

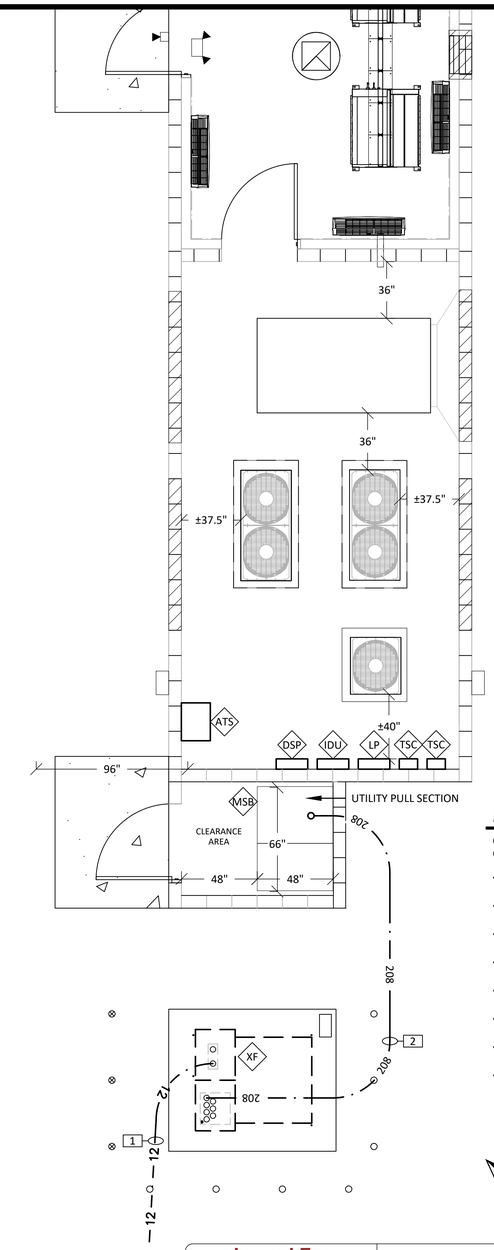


## NOTES

CONDUIT ROUTING SHOWN AS DIAGRAMMATIC. DOES NOT INDICATE TRENCH AND CONDUIT LAYOUT.

- MSB — UTILITY METER MAIN & UTILITY PULL SECTION
- ATS — AUTOMATIC TRANSFER SWITCH
- DSP — PANEL DSP
- IDU — PANEL IDU
- LP — PANEL LP
- TSC — TOWER STROBE CONTROLLERS
- XF — UTILITY TRANSFORMER
- BCR — BATTERY & BATTERY CHARGER. # = CHARGER NUMBER

0 2'-0" 4'-0" 8'-0"

## RADIO TOWER BUILDING

SCALE: 1/4" = 1'

— · — 12 — UTILITY PRIMARY

— · — 208 — UTILITY SECONDARY

## CABLE AND CONDUIT SCHEDULE

| NO. | QTY | SIZE | NO. WIRES | WIRE SIZE | GND | FUNCTION | FROM | TO |
|---|---|---|---|---|---|---|---|---|
| 1 | XFMR Primary Per Utility | | | | | XFMR Primary | Utility | XFMR-MS |
| 2 | 2 | 5" | 8 (2 per PH) | #750 & 4/0N | 1/0 | XFMR Seconday | XFMR-MS | Utility Meter/Main |
| 3 | - | - | - | - | - | - | - | - |

**Issued For Construction**

JOB: FC-PW041.2

DATE: April 2024

DSGN: AR/WCH
DRWN: WCH
UPD: WCH
FILE: E03-Electrical Site Plan-
PLOT: 5/7/2024 12:52 PM

REGISTERED PROFESSIONAL ENGINEER ABDUR REHMAN No. 22090 ELECTRICAL STATE OF CALIFORNIA

DATE: 5/7/2024


**ELECTRICAL POWER SYSTEMS**
ENGINEERING SOLUTIONS
2187 Herndon Ave #102 Clovis CA 93611 (559) 221-7230
JOE PREVENDAR P.E. CA EE 16581 joe@epsfresno.com
ABDUR REHMAN P.E. CA EE 22090 abdur@epsfresno.com




| | DATE | RECORD DRAWING | DATE |
|---|---|---|---|
| DESIGNED: | | RESIDENT ENGINEER | |
| DRAWN: | | | |
| CHECKED: | | | |

FOR RIGHT OF WAY DATA AND ACCURATE ACCESS DETERMINATION, SEE DOCUMENTS IN THE DEPARTMENT OF PUBLIC WORKS AND PLANNING.

SCALE
HORIZ 0 10' 20'
VERT 0 1' 2'

#### DATE

PROJECT
DEPARTMENT OF INTERNAL SERVICES
REEDLEY RADIO TOWER EQUIPMENT SHELTER

DEPARTMENT OF PUBLIC WORKS AND PLANNING
ELECTRICAL BUILDING PLAN

DRAWING NO. ##### SHEET NO. E03 TOTAL 12

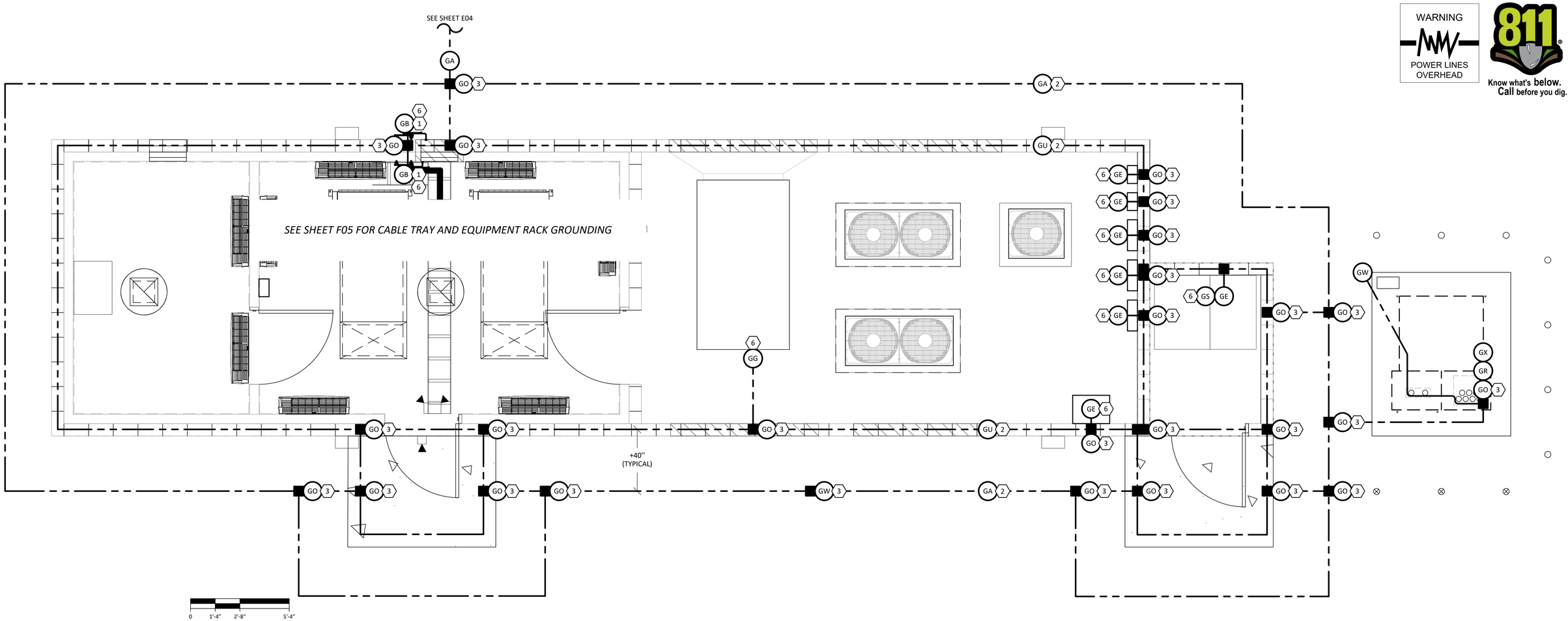


WARNING
POWER LINES OVERHEAD

811 Know what's below. Call before you dig.

## RADIO TOWER GROUNDING PLAN

SCALE: 3/8" = 1'

## NOTES

CONDUIT ROUTING SHOWN AS DIAGRAMMATIC. DOES NOT INDICATE TRENCH AND CONDUIT LAYOUT.

1. BUILDING GROUND BUS BAR
2. TOWER AND BUILDING GROUND RINGS OF 250MCM BARE CU IN +30" DEEP TRENCH ENCLOSED IN 6" CONCRETE ALL AROUND. SEE TRENCH DETAIL
3. ■ EXOTHERMIC (CADWELD) CONNECTIONS
4. CONNECTIONS TO TOWER LEGS
5. 3/4" X 10' GROUND ROD
6. 500kCMIL CU FROM BUILDING GROUND RING TO GROUND BUS. #4/0 CU OR LARGER FROM GROUND BUS TO GROUND BUS.

## LEGEND

SEE SHEET E09 & E10 FOR GROUND DETAILS.

- GA GROUND - BARE COPPER
- GB GROUND - BUS BAR
- GE GROUND - EQUIPMENT BONDING OR IMBEDDED
- GG GROUND - GENERATOR
- GO GROUND - CABLE CONNECTION
- GR GROUND - BURIED ROD
- GS GROUND - SERVICE
- GU GROUND - UFER
- GW GROUND - WELL
- GX GROUND - TRANSFORMER

*Issued For Construction*

JOB:FC-PW041.2
DATE:May 2024
DSGN: AR/WCH
DRWN: WCH
UPD: WCH
FILE: E04-Grounding Plan-
PLOT: 5/3/2024 3:55 PM

REGISTERED PROFESSIONAL ENGINEER ABDUR REHMAN No. 22090 ELECTRICAL STATE OF CALIFORNIA
DATE: 5/3/2024


**ELECTRICAL POWER SYSTEMS**
ENGINEERING SOLUTIONS
2187 Herndon Ave #102 Clovis CA 93611 (559) 221-7230
JOE PREVENDAR P.E. CA EE 16581 joe@epsfresno.com
ABDUR REHMAN P.E. CA EE 22090 abdur@epsfresno.com




| | DATE | RECORD DRAWING | |
|---|---|---|---|
| DESIGNED: | | RESIDENT ENGINEER | DATE |
| DRAWN: | | | |
| CHECKED: | | | |

FOR RIGHT OF WAY DATA AND ACCURATE ACCESS DETERMINATION, SEE DOCUMENTS IN THE DEPARTMENT OF PUBLIC WORKS AND PLANNING.

SCALE
HORIZ 0 10' 20'
VERT 0 1' 2'

#### DATE

PROJECT
DEPARTMENT OF INTERNAL SERVICES
REEDLEY RADIO TOWER EQUIPMENT SHELTER

THE COUNTY OF FRESNO

DEPARTMENT OF PUBLIC WORKS AND PLANNING
GROUNDING PLAN

DRAWING NO. ##### SHEET NO. E04 TOTAL 12

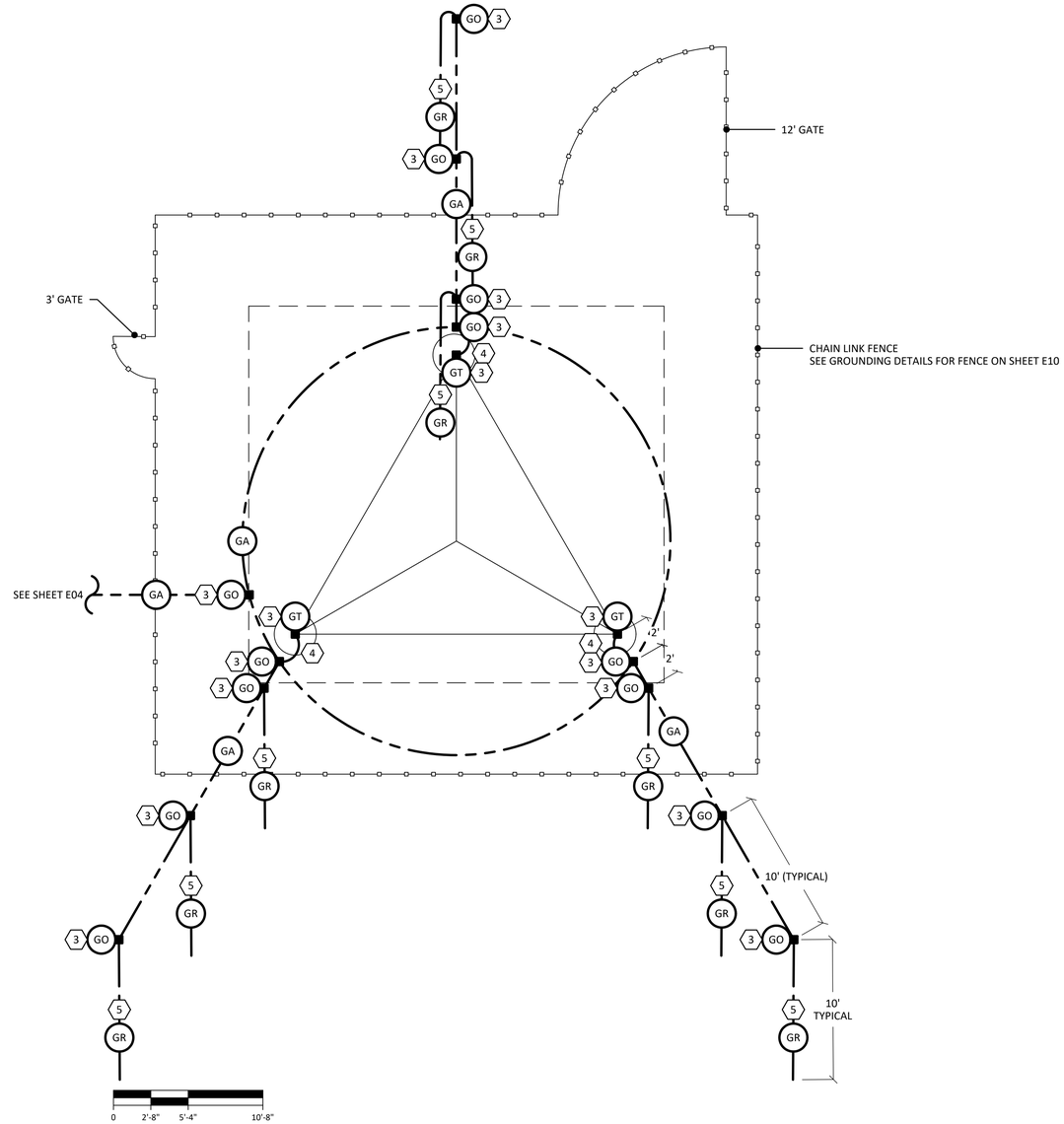


## RADIO TOWER GROUNDING PLAN

SCALE: 3/16" = 1'

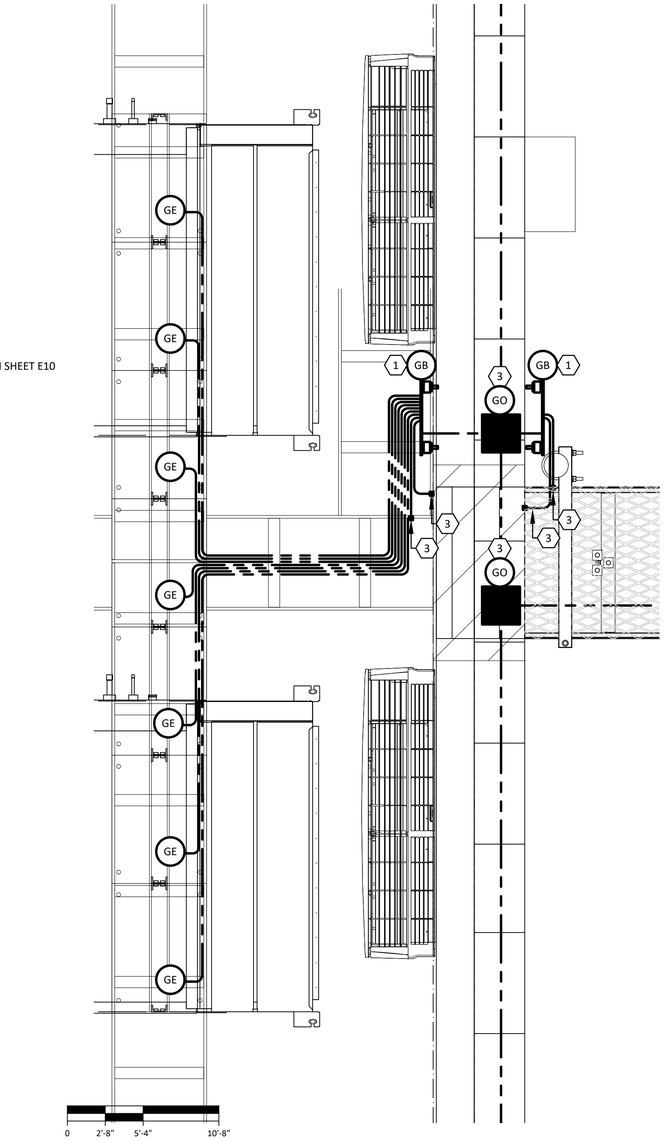


## RACKS AND CABLE TRAYS GROUNDING

SCALE: 3/16" = 1'

WARNING
POWER LINES OVERHEAD

811 Know what's below. Call before you dig.

## LEGEND

SEE SHEET E09 & E10 FOR GROUND DETAILS.

- GA GROUND - BARE COPPER
- GB GROUND - BUS BAR
- GE GROUND - EQUIPMENT BONDING OR IMBEDDED
- GG GROUND - GENERATOR
- GO GROUND - CABLE CONNECTION
- GR GROUND - BURIED ROD
- GT GROUND RING TO TOWER GROUND

## NOTES

CONDUIT ROUTING SHOWN AS DIAGRAMMATIC. DOES NOT INDICATE TRENCH AND CONDUIT LAYOUT.

1. BUILDING GROUND BUS BAR
2. TOWER AND BUILDING GROUND RINGS OF 250MCM BARE CU IN +30" DEEP TRENCH ENCLOSED IN 6" CONCRETE ALL AROUND. SEE TRENCH DETAIL
3. ■ EXOTHERMIC (CADWELD) CONNECTIONS
4. CONNECTIONS TO TOWER LEGS
5. 3/4" X 10' GROUND ROD
6. 500kCMIL CU FROM BUILDING GROUND RING TO GROUND BUS. #4/0 CU OR LARGER FROM GROUND BUS TO GROUND BUS.

**Issued For Construction**

JOB:FC-PW041.2

DATE:May 2024

DSGN: AR/WCH
DRWN: WCH
UPD: WCH
FILE: E05-Grounding Plan-
PLOT: 5/3/2024 3:54 PM

REGISTERED PROFESSIONAL ENGINEER ABDUR REHMAN No. 22090 ELECTRICAL STATE OF CALIFORNIA

DATE: 5/3/2024


**ELECTRICAL POWER SYSTEMS**
ENGINEERING SOLUTIONS
2187 Herndon Ave #102 Clovis CA 93611 (559) 221-7230
JOE PREVENDAR P.E. CA EE 16581 joe@epsfresno.com
ABDUR REHMAN P.E. CA EE 22090 abdur@epsfresno.com




| | DATE | RECORD DRAWING | |
|---|---|---|---|
| DESIGNED: | | RESIDENT ENGINEER | DATE |
| DRAWN: | | | |
| CHECKED: | | | |

FOR RIGHT OF WAY DATA AND ACCURATE ACCESS DETERMINATION, SEE DOCUMENTS IN THE DEPARTMENT OF PUBLIC WORKS AND PLANNING.

SCALE
HORIZ 0 10' 20'
VERT 0 1' 2'

#### DATE

PROJECT
DEPARTMENT OF INTERNAL SERVICES
REEDLEY RADIO TOWER EQUIPMENT SHELTER

THE COUNTY OF FRESNO

DEPARTMENT OF PUBLIC WORKS AND PLANNING
GROUNDING PLAN

DRAWING NO. ##### SHEET NO. E05 TOTAL 12

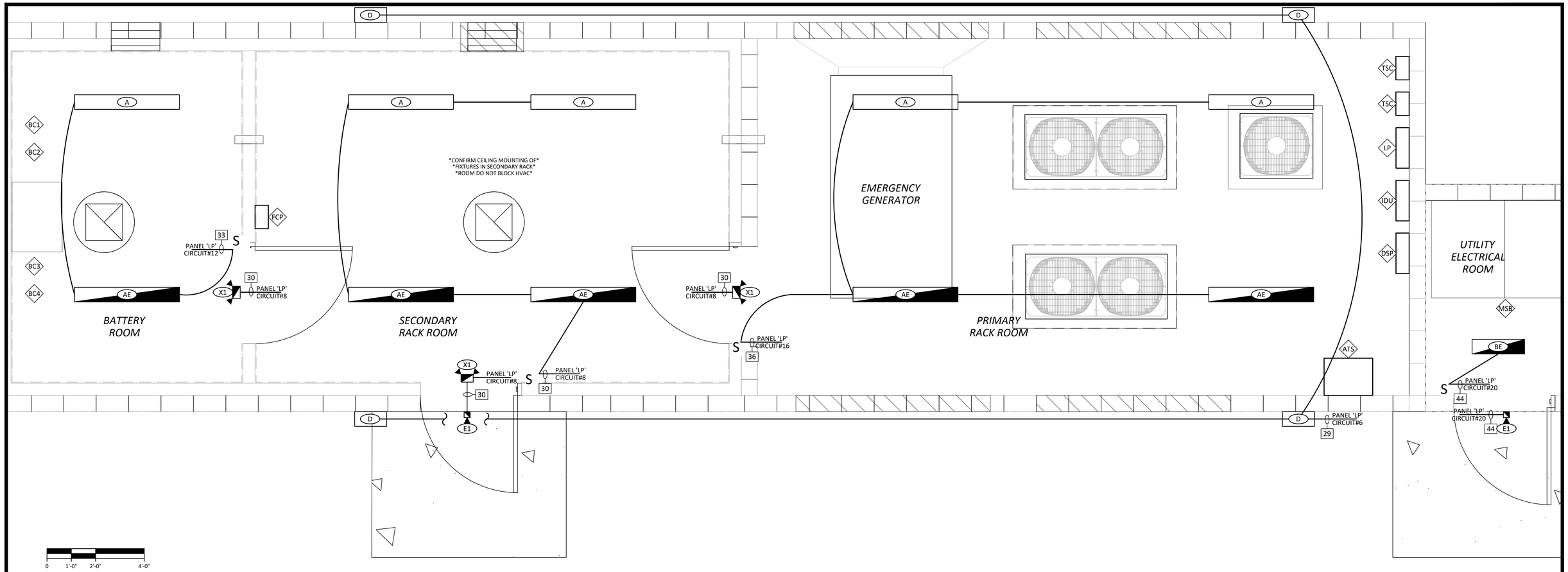


## BUILDING LIGHTING AND RECEPTACLE PLAN

SCALE: 1/2" = 1'
SEE SHEET E07 FOR CABLE AND CONDUIT SCHEDULE

## NOTES

CONDUIT ROUTING SHOWN AS DIAGRAMMATIC. DOES NOT INDICATE TRENCH AND CONDUIT LAYOUT.

- MSB — UTILITY METER MAIN
- ATS — AUTOMATIC TRANSFER SWITCH
- DSP — PANEL DSP
- IDU — PANEL IDU
- LP — PANEL LP
- TSC — TOWER STROBE CONTROLLERS
- FCP — SAPPHIRE FCP
- XF — UTILITY TRANSFORMER
- BC# — BATTERY & BATTERY CHARGER. # = CHARGER NUMBER
- EF — EXHAUST FAN

## FIXTURES

| DESIG. | TYPE/DESCRIPTION | LAMP | MOUNTING | CONTROL | VOLTS | WATTS | COLOR | MFG'R | MODEL |
|---|---|---|---|---|---|---|---|---|---|
| A | 4' Vapor Tight Strip | LED | TRUNNION | WLOS | UNV | 29 | 4000K | ILP | WTZ4 4L U 40 SAFL MWUSBD |
| AE | Emergency | LED | TRUNNION | WLOS | UNV | 29 | 4000K | ILP | WTZ4 4L U 40 SAFL EM10/HE-SD MWUSBD |
| BE | 2' Vapor Tight Strip with Emergency | LED | TRUNNION | WLOS | UNV | 19 | 4000K | ILP | WTZ2 2L U 40 SAFL EM10/HE-SD MWUSBD |
| D | Wallpack | LED | WALL | PC / WLOS | UNV | 24 | 4000K | ILP | SWP 3L U CCTS BRZ PCU USBD/L2 |
| | ILP Programming Tool | | | | | | | ILP | MW/RC |
| E1 | Exit Bug | LED | SPECIFY | - | 120-277 | 8 | | EXITRONIX | SLW 15 4K EM |
| X1 | Exit Sign | LED | SPECIFY | - | 120-277 | 4 | | EXITRONIX | LOBO R WH |

**Issued For Construction**

JOB:FC-PW041.2
DATE: April 2024
DSGN: AR/WCH
DRWN: WCH
UPD: WCH
FILE: E06-Lighting Plan-
PLOT: 5/7/2024 12:52 PM

REGISTERED PROFESSIONAL ENGINEER — ABDUR REHMAN — No. 22090 — ELECTRICAL — STATE OF CALIFORNIA
DATE: 5/7/2024


**ELECTRICAL POWER SYSTEMS**
ENGINEERING SOLUTIONS
2187 Herndon Ave #102 Clovis CA 93611 (559) 221-7230
JOE PREVENDAR P.E. CA EE 16581 joe@epsfresno.com
ABDUR REHMAN P.E. CA EE 22090 abdur@epsfresno.com




| | DATE | RECORD DRAWING | DATE |
|---|---|---|---|
| DESIGNED: | | RESIDENT ENGINEER | |
| DRAWN: | | | |
| CHECKED: | | | |

FOR RIGHT OF WAY DATA AND ACCURATE ACCESS DETERMINATION, SEE DOCUMENTS IN THE DEPARTMENT OF PUBLIC WORKS AND PLANNING.

SCALE
HORIZ 0 10' 20'
VERT 0 1' 2'

#### DATE

PROJECT
DEPARTMENT OF INTERNAL SERVICES
REEDLEY RADIO TOWER EQUIPMENT SHELTER

THE COUNTY OF FRESNO

DEPARTMENT OF PUBLIC WORKS AND PLANNING
ELECTRICAL BUILDING LIGHTING PLAN
DRAWING NO. ##### SHEET NO. E06 TOTAL 12

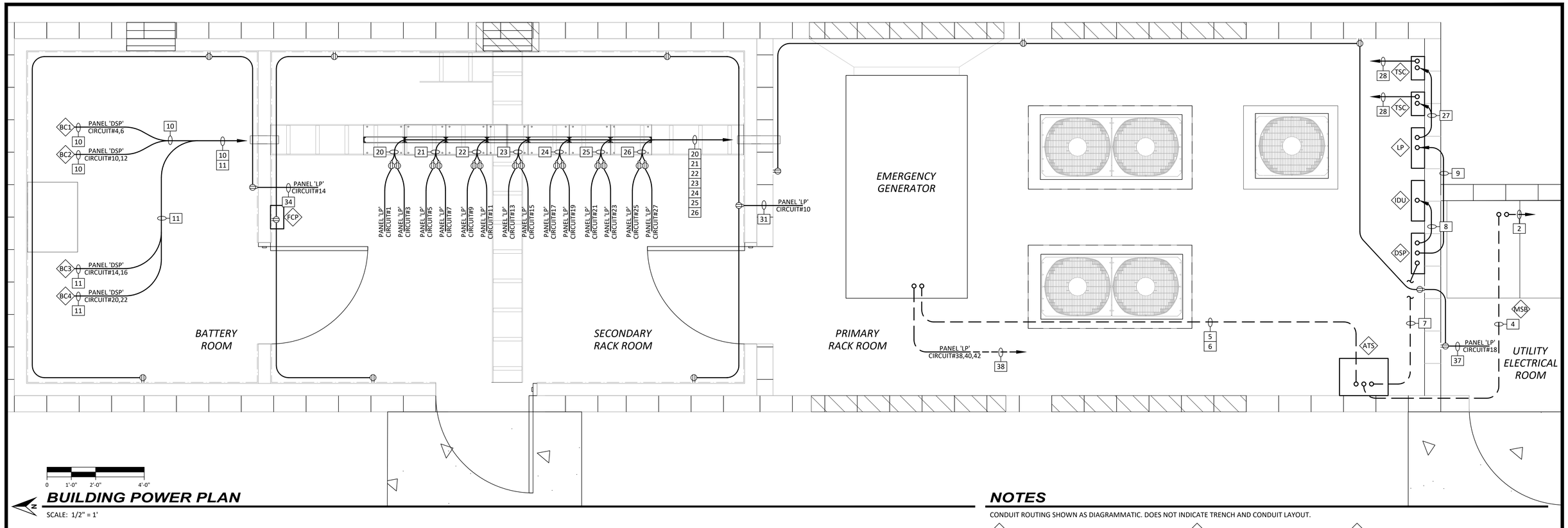


0 1'-0" 2'-0" 4'-0"

## BUILDING POWER PLAN

SCALE: 1/2" = 1'

## NOTES

CONDUIT ROUTING SHOWN AS DIAGRAMMATIC. DOES NOT INDICATE TRENCH AND CONDUIT LAYOUT.

- MSB — UTILITY METER MAIN
- ATS — AUTOMATIC TRANSFER SWITCH
- DSP — PANEL DSP
- IDU — PANEL IDU
- LP — PANEL LP
- TSC — TOWER STROBE CONTROLLERS
- FCP — SAPPHIRE FCP
- XF — UTILITY TRANSFORMER
- BC# — BATTERY & BATTERY CHARGER. # = CHARGER NUMBER
- EF — EXHAUST FAN

## CABLE AND CONDUIT SCHEDULE

| NO. | QTY | SIZE | NO. WIRES | WIRE SIZE | GND | FUNCTION | FROM | TO |
|---|---|---|---|---|---|---|---|---|
| 1 | XFMR Primary Per Utility | | | | | XFMR Primary | Utility | XFMR-MS |
| 2 | 2 | 5" | 6+2N | #750 & 4/0N | 1/0 | XFMR Seconday | XFMR-MS | Utility Meter/Main |
| 3 | - | - | - | - | - | - | - | - |
| 4 | 2 | 4" | 6+2N | #350 | 1/0 | 600A ATS Normal Power Feeder | Utility Meter/Main | 600A ATS - Normal |
| 5 | 2 | 4" | 6+2N | #350 | 1/0 | Emergency Power Feeder | Emergency Generator | 600A ATS - Emergency Power |
| 6 | 1 | 3/4" | 6 | #12 | #12 | ATS Control | 600A ATS | Generator Control Panel |
| 7 | 2 | 4" | 6+2N | #350 | 1/0 | Panel 'DSP' Feeder | 600A ATS Load Side | Panel 'DSP' |
| 8 | 1 | 1-1/4" | 3+1N | #2 | #8 | Panel 'IDU' Feeder | Panel 'DSP' | Panel 'IDU' |
| 9 | 1 | 1-1/4" | 3+1N | #2 | #8 | Panel 'LP' Feeder | Panel 'DSP' | Panel 'LP' |
| 10 | 1 | 1" | 4+2N | #8 | #10 | Battery Charger #1 & #2 | Panel 'DSP' | Battery Charger #1 & #2 CS8269 Twist Lock Receptacle |
| 11 | 1 | 1" | 4+2N | #8 | #10 | Battery Charger #3 & #4 | Panel 'DSP' | Battery Charger #3 & #4 CS8269 Twist Lock Receptacle |
| 12 | 1 | 3/4" | 2+1N | #8 | #10 | ODU-1 3 Tons | Panel 'DSP' | ODU-1 3 Tons |
| 13 | 1 | 1-1/4" | 3+1N | #4 | #8 | ODU-2 14 Tons | Panel 'DSP' | ODU-2 14 Tons |
| 14 | 1 | 1-1/4" | 3+1N | #4 | #8 | ODU-3 14 Tons | Panel 'DSP' | ODU-3 14 Tons |
| 15 | 1 | 3/4" | 4+2N | #12 | #12 | IDU-1A & IDU-1B | Panel 'IDU' | IDU-1A & IDU-1B |
| 16 | 1 | 3/4" | 4+2N | #12 | #12 | IDU-2A & IDU-2B | Panel 'IDU' | IDU-2A & IDU-2B |
| 17 | 1 | 3/4" | 4+2N | #12 | #12 | IDU-3A & IDU-3B | Panel 'IDU' | IDU-3A & IDU-3B |
| 18 | 1 | 3/4" | 4+2N | #12 | #12 | IDU-3C & IDU-3F | Panel 'IDU' | IDU-3C & IDU-3F |
| 19 | 1 | 3/4" | 4+2N | #12 | #12 | IDU-3D & IDU-3E | Panel 'IDU' | IDU-3D & IDU-3E |
| 20 | 1 | 3/4" | 2+2N | #12 | #12 | Rack #1 Outlet Duplex #1 & #2 | Panel 'LP' | Rack #1 Outlet Duplex #1 & #2 |
| 21 | 1 | 3/4" | 2+2N | #12 | #12 | Rack #1 Outlet Duplex #3 & #4 | Panel 'LP' | Rack #1 Outlet Duplex #3 & #4 |
| 22 | 1 | 3/4" | 2+2N | #12 | #12 | Rack #1 Outlet Duplex #4 & #6 | Panel 'LP' | Rack #1 Outlet Duplex #4 & #6 |
| 23 | 1 | 3/4" | 2+2N | #12 | #12 | Rack #1 Outlet Duplex #7 & #8 | Panel 'LP' | Rack #1 Outlet Duplex #7 & #8 |
| 24 | 1 | 3/4" | 2+2N | #12 | #12 | Rack #1 Outlet Duplex #9 & #10 | Panel 'LP' | Rack #1 Outlet Duplex #9 & #10 |
| 25 | 1 | 3/4" | 2+2N | #12 | #12 | Rack #1 Outlet Duplex #11 & #12 | Panel 'LP' | Rack #1 Outlet Duplex #11 & #12 |
| 26 | 1 | 3/4" | 2+2N | #12 | #12 | Rack #1 Outlet Duplex #13 & #14 | Panel 'LP' | Rack #1 Outlet Duplex #13 & #14 |
| 27 | 1 | 3/4" | 2+2N | #12 | #12 | Tower Strobe 1 & 2 Controllers | Panel 'LP' | Tower Strobe 1 & 2 Controllers |
| 28 | 1 | 3/4" | 2+2N | #12 | #12 | Tower Strobes 1 & 2 | Tower Strobe 1 & 2 Controllers | Tower Strobes 1 & 2 |
| 29 | 1 | 3/4" | 1+1N | #12 | #12 | Exterior Building Fixtures | Panel 'LP' | Exterior Building Fixtures |
| 30 | 1 | 3/4" | 1+1N | #12 | #12 | Data Rack Room Fixtures | Panel 'LP' | Exterior Building Fixtures |
| 31 | 1 | 3/4" | 1+1N | #12 | #12 | Data Rack Room Receptacles | Panel 'LP' | Data Rack Room Receptacles |
| 32 | 1 | 3/4" | 1+1N | #12 | #12 | Data Rack Room Exhaust Fan | Panel 'LP' | Exhaust Fan #2 |
| 33 | 1 | 3/4" | 1+1N | #12 | #12 | Battery Room Fixtures | Panel 'LP' | Battery Room Fixtures |
| 34 | 1 | 3/4" | 1+1N | #12 | #12 | Battery Room Receptacles | Panel 'LP' | Battery Room Receptacles |
| 35 | 1 | 3/4" | 1+1N | #12 | #12 | Battery Room Exhaust Fan | Panel 'LP' | Exhaust Fan #1 |
| 36 | 1 | 3/4" | 1+1N | #12 | #12 | Generator Room Fixtures | Panel 'LP' | Generator Room Fixtures |
| 37 | 1 | 3/4" | 1+1N | #12 | #12 | Generator Room Receptacles | Panel 'LP' | Generator Room Receptacles |
| 38 | 1 | 1" | 4+2N | #10 | #12 | Emergency Generator Heater & Charger | Panel 'LP' | Emergency Generator Heater & Charger |

**Issued For Construction**

JOB:FC-PW041.2

DATE: April 2024

DSGN: AR/WCH
DRWN: WCH
UPD: WCH
FILE: E07-Building Power Plan-
PLOT: 5/7/2024 12:52 PM

REGISTERED PROFESSIONAL ENGINEER ABDUR REHMAN No. 22090 ELECTRICAL STATE OF CALIFORNIA

DATE: 5/7/2024


**ELECTRICAL POWER SYSTEMS**
ENGINEERING SOLUTIONS
2187 Herndon Ave #102 Clovis CA 93611 (559) 221-7230
JOE PREVENDAR P.E. CA EE 16581 joe@epsfresno.com
ABDUR REHMAN P.E. CA EE 22090 abdur@epsfresno.com




| | DATE | RECORD DRAWING | DATE |
|---|---|---|---|
| DESIGNED: | | RESIDENT ENGINEER | |
| DRAWN: | | | |
| CHECKED: | | | |

FOR RIGHT OF WAY DATA AND ACCURATE ACCESS DETERMINATION, SEE DOCUMENTS IN THE DEPARTMENT OF PUBLIC WORKS AND PLANNING.

SCALE
HORIZ 0 10' 20'
VERT 0 1' 2'

#### DATE

PROJECT
DEPARTMENT OF INTERNAL SERVICES
REEDLEY RADIO TOWER EQUIPMENT SHELTER

THE COUNTY OF FRESNO

DEPARTMENT OF PUBLIC WORKS AND PLANNING
BUILDING POWER PLAN

DRAWING NO. ##### SHEET NO. E07 TOTAL 12

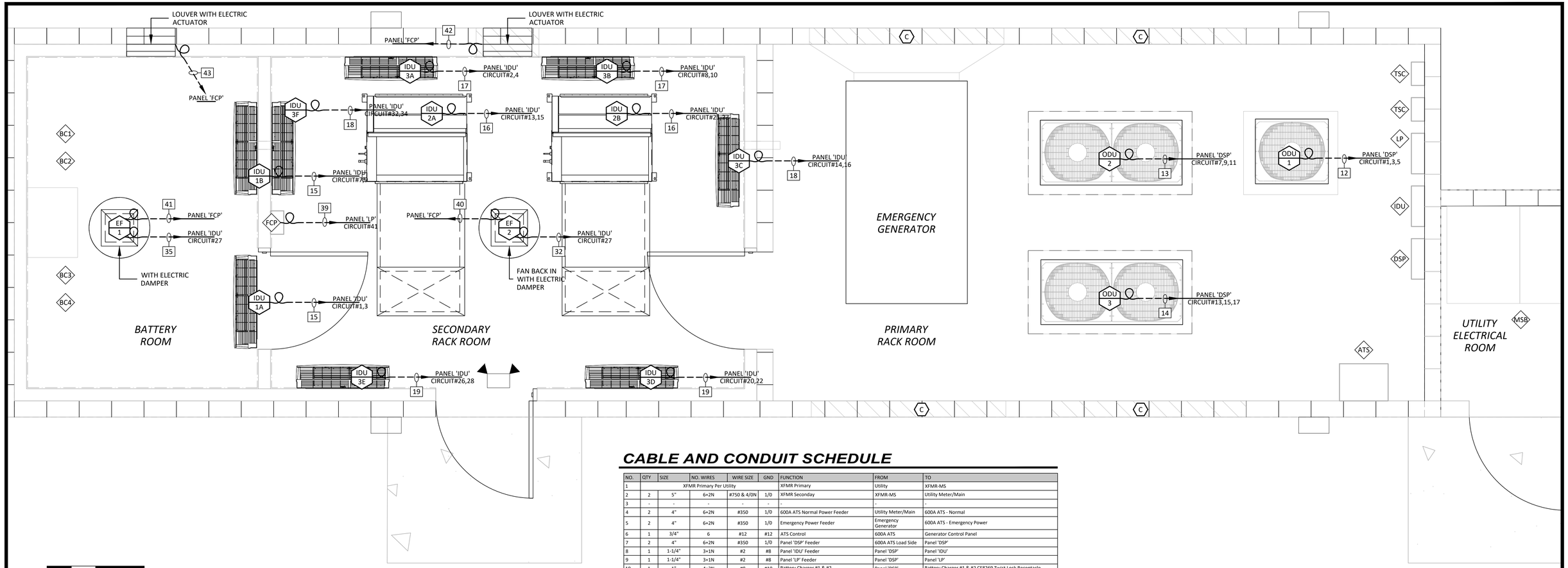


0 1'-0" 2'-0" 4'-0"

## BUILDING HVAC POWER PLAN

SCALE: 1/2" = 1'
SEE SHEET E07 FOR CABLE AND CONDUIT SCHEDULE
PANEL 'FCP' SAPPHIRE CONTROL PANEL BY OTHERS. ONLY CONTROL AND POWER WIRES SHOWN.

## NOTES

CONDUIT ROUTING SHOWN AS DIAGRAMMATIC. DOES NOT INDICATE TRENCH AND CONDUIT LAYOUT.

- MSB — UTILITY METER MAIN
- ATS — AUTOMATIC TRANSFER SWITCH
- DSP — PANEL DSP
- IDU — PANEL IDU
- LP — PANEL LP
- FCP — SAPPFIRE FCP
- TSC — TOWER STROBE CONTROLLERS
- XF — UTILITY TRANSFORMER
- BC# — BATTERY & BATTERY CHARGER. # = CHARGER NUMBER
- EF — EXHAUST FAN
- C — LOUVERS

## CABLE AND CONDUIT SCHEDULE

| NO. | QTY | SIZE | NO. WIRES | WIRE SIZE | GND | FUNCTION | FROM | TO |
|---|---|---|---|---|---|---|---|---|
| 1 | XFMR Primary Per Utility | | | | | XFMR Primary | Utility | XFMR-MS |
| 2 | 2 | 5" | 6+2N | #750 & 4/0N | 1/0 | XFMR Seconday | XFMR-MS | Utility Meter/Main |
| 3 | | | | | | | | |
| 4 | 2 | 4" | 6+2N | #350 | 1/0 | 600A ATS Normal Power Feeder | Utility Meter/Main | 600A ATS - Normal |
| 5 | 2 | 4" | 6+2N | #350 | 1/0 | Emergency Power Feeder | Emergency Generator | 600A ATS - Emergency Power |
| 6 | 1 | 3/4" | 6 | #12 | #12 | ATS Control | 600A ATS | Generator Control Panel |
| 7 | 2 | 4" | 6+2N | #350 | 1/0 | Panel 'DSP' Feeder | 600A ATS Load Side | Panel 'DSP' |
| 8 | 1 | 1-1/4" | 3+1N | #2 | #8 | Panel 'IDU' Feeder | Panel 'DSP' | Panel 'IDU' |
| 9 | 1 | 1-1/4" | 3+1N | #2 | #8 | Panel 'LP' Feeder | Panel 'DSP' | Panel 'LP' |
| 10 | 1 | 1" | 4+2N | #8 | #10 | Battery Charger #1 & #2 | Panel 'DSP' | Battery Charger #1 & #2 CS8269 Twist Lock Receptacle |
| 11 | 1 | 1" | 4+2N | #8 | #10 | Battery Charger #3 & #4 | Panel 'DSP' | Battery Charger #3 & #4 CS8269 Twist Lock Receptacle |
| 12 | 1 | 3/4" | 2+1N | #8 | #10 | ODU-1 3 Tons | Panel 'DSP' | ODU-1 3 Tons |
| 13 | 1 | 1-1/4" | 3+1N | #4 | #8 | ODU-2 14 Tons | Panel 'DSP' | ODU-2 14 Tons |
| 14 | 1 | 1-1/4" | 3+1N | #4 | #8 | ODU-3 14 Tons | Panel 'DSP' | ODU-3 14 Tons |
| 15 | 1 | 3/4" | 4+2N | #12 | #12 | IDU-1A & IDU-1B | Panel 'IDU' | IDU-1A & IDU-1B |
| 16 | 1 | 3/4" | 4+2N | #12 | #12 | IDU-2A & IDU-2B | Panel 'IDU' | IDU-2A & IDU-2B |
| 17 | 1 | 3/4" | 4+2N | #12 | #12 | IDU-3A & IDU-3B | Panel 'IDU' | IDU-3A & IDU-3B |
| 18 | 1 | 3/4" | 4+2N | #12 | #12 | IDU-3C & IDU-3F | Panel 'IDU' | IDU-3C & IDU-3F |
| 19 | 1 | 3/4" | 4+2N | #12 | #12 | IDU-3D & IDU-3E | Panel 'IDU' | IDU-3D & IDU-3E |
| 20 | 1 | 3/4" | 2+2N | #12 | #12 | Rack #1 Outlet Duplex #1 & #2 | Panel 'LP' | Rack #1 Outlet Duplex #1 & #2 |
| 21 | 1 | 3/4" | 2+2N | #12 | #12 | Rack #1 Outlet Duplex #3 & #4 | Panel 'LP' | Rack #1 Outlet Duplex #3 & #4 |
| 22 | 1 | 3/4" | 2+2N | #12 | #12 | Rack #1 Outlet Duplex #4 & #6 | Panel 'LP' | Rack #1 Outlet Duplex #4 & #6 |
| 23 | 1 | 3/4" | 2+2N | #12 | #12 | Rack #1 Outlet Duplex #7 & #8 | Panel 'LP' | Rack #1 Outlet Duplex #7 & #8 |
| 24 | 1 | 3/4" | 2+2N | #12 | #12 | Rack #1 Outlet Duplex #9 & #10 | Panel 'LP' | Rack #1 Outlet Duplex #9 & #10 |
| 25 | 1 | 3/4" | 2+2N | #12 | #12 | Rack #1 Outlet Duplex #11 & #12 | Panel 'LP' | Rack #1 Outlet Duplex #11 & #12 |
| 26 | 1 | 3/4" | 2+2N | #12 | #12 | Rack #1 Outlet Duplex #13 & #14 | Panel 'LP' | Rack #1 Outlet Duplex #13 & #14 |
| 27 | 1 | 3/4" | 2+2N | #12 | #12 | Tower Strobe 1 & 2 Controllers | Panel 'LP' | Tower Strobe 1 & 2 Controllers |
| 28 | 1 | 3/4" | 2+2N | #12 | #12 | Tower Strobes 1 & 2 | Tower Strobe 1 & 2 Controllers | Tower Strobes 1 & 2 |
| 29 | 1 | 3/4" | 1+1N | #12 | #12 | Exterior Building Fixtures | Panel 'LP' | Exterior Building Fixtures |
| 30 | 1 | 3/4" | 1+1N | #12 | #12 | Data Rack Room Fixtures | Panel 'LP' | Exterior Building Fixtures |
| 31 | 1 | 3/4" | 1+1N | #12 | #12 | Data Rack Room Receptacles | Panel 'LP' | Data Rack Room Receptacles |
| 32 | 1 | 3/4" | 1+1N | #12 | #12 | Data Rack Room Exhaust Fan | Panel 'LP' | Exhaust Fan #2 |
| 33 | 1 | 3/4" | 1+1N | #12 | #12 | Battery Room Fixtures | Panel 'LP' | Battery Room Fixtures |
| 34 | 1 | 3/4" | 1+1N | #12 | #12 | Battery Room Receptacles | Panel 'LP' | Battery Room Receptacles |
| 35 | 1 | 3/4" | 1+1N | #12 | #12 | Battery Room Exhaust Fan | Panel 'LP' | Exhaust Fan #1 |
| 36 | 1 | 3/4" | 1+1N | #12 | #12 | Generator Room Fixtures | Panel 'LP' | Generator Room Fixtures |
| 37 | 1 | 3/4" | 1+1N | #12 | #12 | Generator Room Receptacles | Panel 'LP' | Generator Room Receptacles |
| 38 | 1 | 1" | 4+2N | #10 | #12 | Emergency Generator Heater & Charger | Panel 'LP' | Emergency Generator Heater & Charger |
| 39 | 1 | 3/4" | 1+1N | #10 | #10 | Saphire Control Power | Panel 'LP' | Sapphire 'FCP' |
| 40 | 1 | 3/4" | 1+1N | #12 | #12 | Data Rack Room Exhaust Fan Damper | Sapphire 'FCP' | Data Rack Room Exhaust Fan |
| 41 | 1 | 3/4" | 1+1N | #12 | #12 | Battery Room Exhaust Fan Damper | Sapphire 'FCP' | Battery Room Exhaust Fan |
| 42 | 1 | 3/4" | 1+1N | #12 | #12 | Data Rack Room Motorized Louver | Sapphire 'FCP' | Data Rack Room Motorized Louver |
| 43 | 1 | 3/4" | 1+1N | #12 | #12 | Battery Room Motorized Louver | Sapphire 'FCP' | Battery Room Motorized Louver |
| 44 | 1 | 3/4" | 1+1N | #12 | #12 | Utility Room Lighting | Panel 'LP' | Utility Room Lighting |
| 45 | | | | | | | | |

**Issued For Construction**

JOB:FC-PW041.2

DATE: April 2024

DSGN: AR/WCH
DRWN: WCH
UPD: WCH
FILE: E08-HVAC Plan-
PLOT: 5/7/2024 12:51 PM

REGISTERED PROFESSIONAL ENGINEER ABDUR REHMAN No. 22090 ELECTRICAL STATE OF CALIFORNIA

DATE: 5/7/2024


**ELECTRICAL POWER SYSTEMS**
ENGINEERING SOLUTIONS
2187 Herndon Ave #102 Clovis CA 93611 (559) 221-7230
JOE PREVENDAR P.E. CA EE 16581 joe@epsfresno.com
ABDUR REHMAN P.E. CA EE 22090 abdur@epsfresno.com




| | DATE | RECORD DRAWING | DATE |
|---|---|---|---|
| DESIGNED: | | RESIDENT ENGINEER | |
| DRAWN: | | | |
| CHECKED: | | | |

FOR RIGHT OF WAY DATA AND ACCURATE ACCESS DETERMINATION, SEE DOCUMENTS IN THE DEPARTMENT OF PUBLIC WORKS AND PLANNING.

SCALE
HORIZ 0 10' 20'
VERT 0 1' 2'

#### DATE

PROJECT
DEPARTMENT OF INTERNAL SERVICES
REEDLEY RADIO TOWER EQUIPMENT SHELTER

THE COUNTY OF FRESNO

DEPARTMENT OF PUBLIC WORKS AND PLANNING
ELECTRICAL HVAC POWER PLAN

DRAWING NO. ##### SHEET NO. E08 TOTAL 12

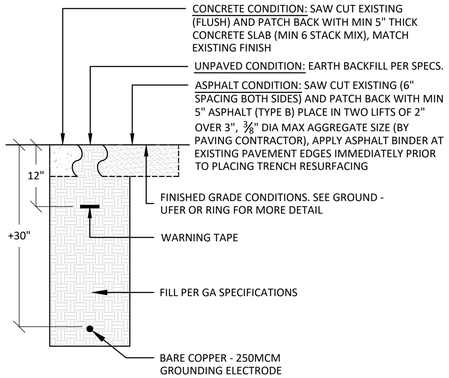


## GA GROUND - BARE COPPER

BARE COPPER SHALL HAVE ULTRAFILL OR APPROVED EQUAL BACKFILL WITH A MINIMUM OF 6" COVERAGE.

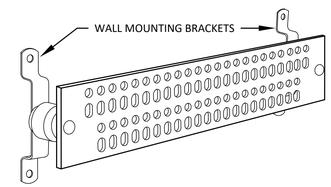


## GB GROUND - BUS BAR

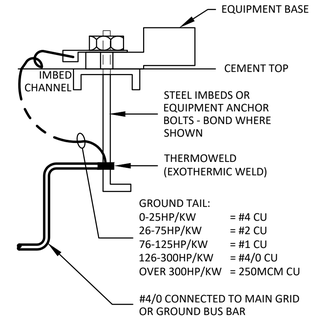


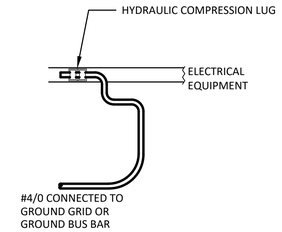


## GE GROUND - EQUIPMENT BONDING OR IMBEDED

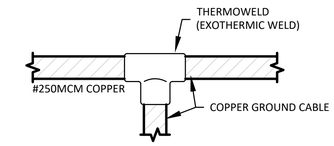


## GO GROUND - CABLE CONNECTION

IN TRENCHES WHERE CALLED FOR OR IN BOTTOM 2" OF CONCRETE FOOTINGS

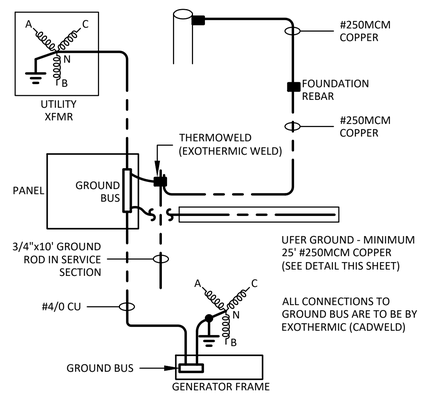


## GG GENERATOR - GROUNDING

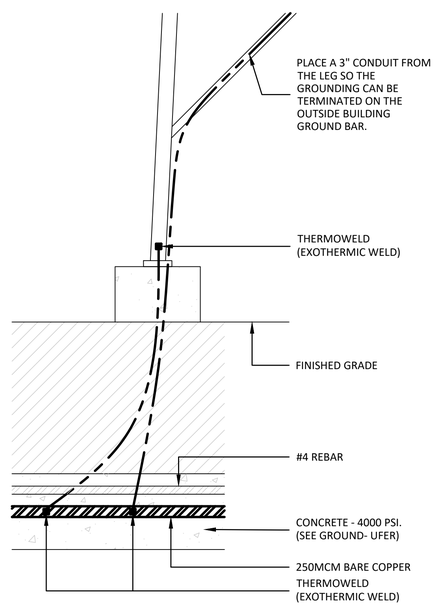


## GT GROUND RING TO TOWER GROUND

1) TOWER GROUND BUS BAR SHALL BE CONNECTED TO THE TOWER GROUNDING ELECTRODE SYSTEM WITH A MINIMUM #2 CU CONDUCTOR.
2) THE GROUNDING CONDUCTOR SHALL BOND TO THE BUS BAR USING EXOTHERMIC WELD OR IRREVERSIBLE COMPRESSION CONNECTORS.

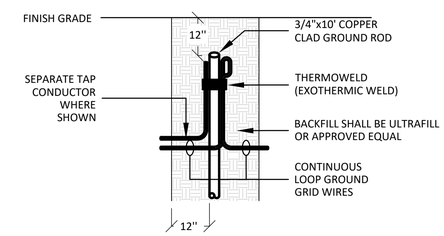


## GR GROUND - BURIED ROD

ALL GROUND RODS SHALL HAVE ULTRAFILL OR APPROVED EQUAL BACKFILL.

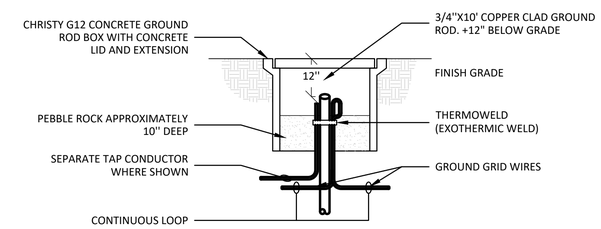


## GW GROUND - WELL

CHRISTY G12 OR APPROVED EQUAL. (MINIMUM 12" DIAMETER)
ALL GROUND RODS SHALL HAVE ULTRAFILL OR APPROVED EQUAL BACKFILL.

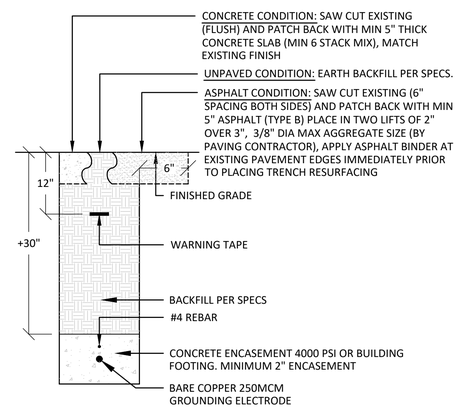


## GU GROUND - UFER

UFER GROUND 25' MINIMUM. BARE COPPER WITH MINIMUM 3" CONCRETE ENCASEMENT IN DIRECT CONTACT WITH EARTH. CONCRETE WITH VAPOR BARRIERS, FILMS, OR SIMILAR ITEMS SEPARATING CONCRETE FROM EARTH IS NOT CONSIDERED IN DIRECT CONTACT WITH EARTH.

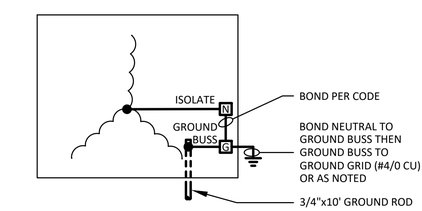


## GX GROUND - TRANSFORMER

SINGLE OR THREE PHASE

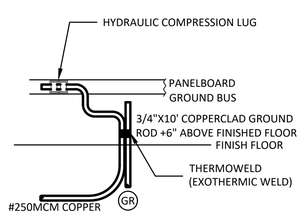


## GS GROUND - SERVICE

ALL GROUND RODS SHALL HAVE ULTRAFILL OR APPROVED EQUAL BACKFILL.

| Issued For Construction | |
|---|---|
| JOB: FC-PW041.2 | |
| DATE: May 2024 | |
| DSGN: AR/WCH | |
| DRWN: WCH | |
| UPD: WCH | |
| FILE: E09-Grounding Details- | |
| PLOT: 5/22/2024 8:50 AM | |

REGISTERED PROFESSIONAL ENGINEER ABDUR REHMAN No. 22090 ELECTRICAL STATE OF CALIFORNIA

DATE: 5/22/2024


**ELECTRICAL POWER SYSTEMS**
ENGINEERING SOLUTIONS
2187 Herndon Ave #102 Clovis CA 93611 (559) 221-7230
JOE PREVENDAR P.E. CA EE 16581 joe@epsfresno.com
ABDUR REHMAN P.E. CA EE 22090 abdur@epsfresno.com




| | DATE | RECORD DRAWING | |
|---|---|---|---|
| DESIGNED: | | RESIDENT ENGINEER | DATE |
| DRAWN: | | | |
| CHECKED: | | | |

FOR RIGHT OF WAY DATA AND ACCURATE ACCESS DETERMINATION, SEE DOCUMENTS IN THE DEPARTMENT OF PUBLIC WORKS AND PLANNING.

SCALE
HORIZ 0 10' 20'
VERT 0 1' 2'

#### DATE

PROJECT
DEPARTMENT OF INTERNAL SERVICES
REEDLEY RADIO TOWER EQUIPMENT SHELTER

THE COUNTY OF FRESNO

DEPARTMENT OF PUBLIC WORKS AND PLANNING
GROUNDING DETAILS

DRAWING NO. ##### SHEET NO. E09 TOTAL 12

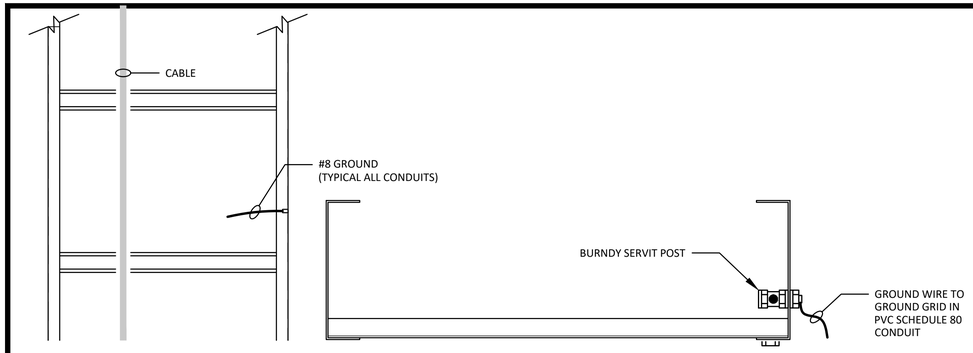


## CABLE TRAY - GROUNDING

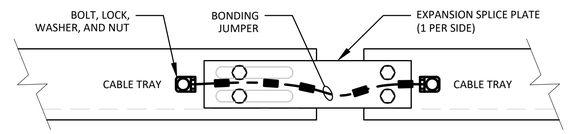


## CABLE TRAY EXPANSION CONNECTION

EXPANSION JOINT TO BE INSTALLED AT EACH JOINING CABLE TRAYS
STRUCTURAL STEEL SIZED PER STRUCTURAL ENGINEER.

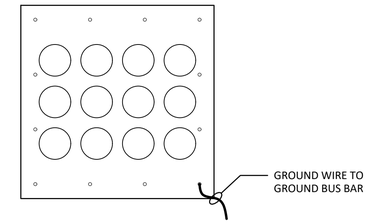


## COAXIAL ENTRY PANEL

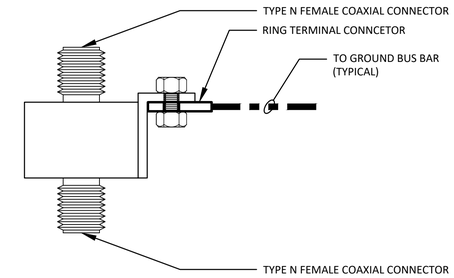


## COAXIAL RF SURGE PROTECTOR

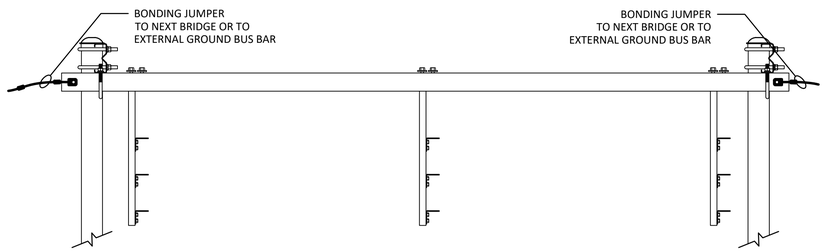


## WAVEGUIDE BRDIGE

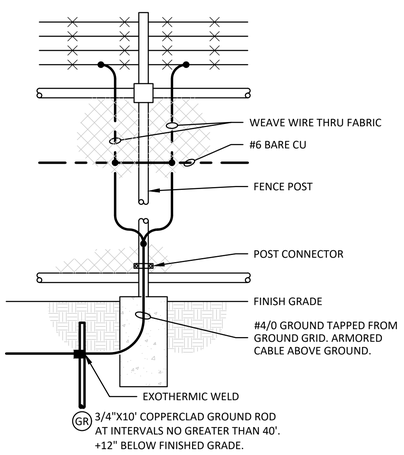


## GROUND - FENCE

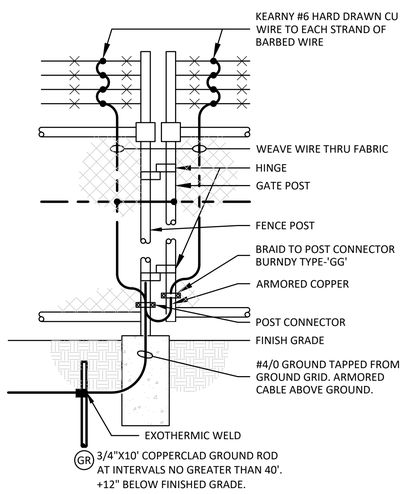


## GROUND - GATE

APPLICABLE IN LOCATIONS WHERE GATES ARE INSTALLED IN =<600V INSTALLATIONS WHERE NOTED ON GROUNDING PLAN. ALSO APPLICABLE WHERE GATES ARE WITHIN 40' OF >600V EQUIPMENT OR SERVICES.

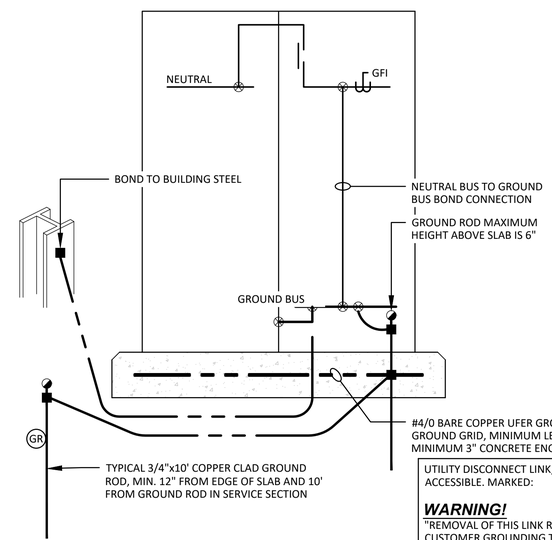


UTILITY DISCONNECT LINK, READILY ACCESSIBLE. MARKED:

***WARNING!***
"REMOVAL OF THIS LINK REMOVES CUSTOMER GROUNDING TO NEUTRAL OF SUPPLY SIDE"

## SWITCHBOARD GROUNDING

NOTE: SERVICE GROUND SIZE AS SHOWN OR AS PER TABLE 250-94-CEC (CURRENT). ALL GROUND CONDUCTORS TO BE COPPER.
ALL LOAD, NEUTRAL, OR BRANCH EQUIPMENT GROUNDING TERMINALS OR NEUTRAL DISCONNECT LINK REQUIRE POLY BARRIERS TO PREVENT EXPOSURE TO LIVE BUS
600A OR LARGER SERVICES SHALL BE THERMOWELD OR SIMILAR

- ◪ GROUND ROD
- ● GROUND CLAMP
- ⊗ COMPRESSION LUG CONNECTION BOLTED TO GROUND BUS - 3/8" 2-HOLE BOLTED CONNECTION USING BELLEVILLE WASHER
- ■ THERMOWELD (EXOTHERMIC WELD)

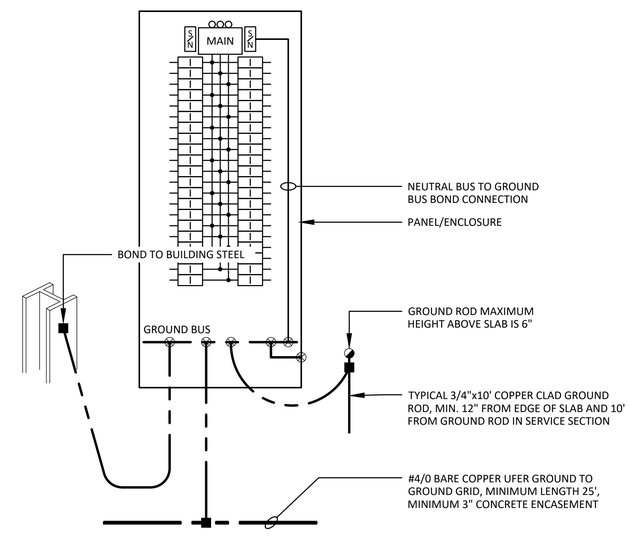


## PANEL BOARD GROUNDING

NOTE: SERVICE GROUND SIZE AS SHOWN OR AS PER TABLE 250-94-CEC (CURRENT). ALL GROUND CONDUCTORS TO BE COPPER.
ALL LOAD, NEUTRAL, OR BRANCH EQUIPMENT GROUNDING TERMINALS OR NEUTRAL DISCONNECT LINK REQUIRE POLY BARRIERS TO PREVENT EXPOSURE TO LIVE BUS
600A OR LARGER SERVICES SHALL BE THERMOWELD OR SIMILAR

- ◪ GROUND ROD
- ● GROUND CLAMP
- ⊗ COMPRESSION LUG CONNECTION BOLTED TO GROUND BUS - 3/8" 2-HOLE BOLTED CONNECTION USING BELLEVILLE WASHER
- ■ THERMOWELD (EXOTHERMIC WELD)

**Issued For Construction**

JOB: FC-PW041.2
DATE: May 2024
DSGN: AR/WCH
DRWN: WCH
UPD: WCH
FILE: E10-Grounding Details-
PLOT: 5/3/2024 4:20 PM

REGISTERED PROFESSIONAL ENGINEER ABDUR REHMAN No. 22090 ELECTRICAL STATE OF CALIFORNIA
DATE: 5/3/2024


**ELECTRICAL POWER SYSTEMS**
ENGINEERING SOLUTIONS
2187 Herndon Ave #102 Clovis CA 93611 (559) 221-7230
JOE PREVENDAR P.E. CA EE 16581 joe@epsfresno.com
ABDUR REHMAN P.E. CA EE 22090 abdur@epsfresno.com




| | DATE | RECORD DRAWING | DATE |
|---|---|---|---|
| DESIGNED: | | RESIDENT ENGINEER | |
| DRAWN: | | | |
| CHECKED: | | | |

FOR RIGHT OF WAY DATA AND ACCURATE ACCESS DETERMINATION, SEE DOCUMENTS IN THE DEPARTMENT OF PUBLIC WORKS AND PLANNING.

SCALE
HORIZ 0 10' 20'
VERT 0 1' 2'

#### DATE

PROJECT
DEPARTMENT OF INTERNAL SERVICES
REEDLEY RADIO TOWER EQUIPMENT SHELTER

THE COUNTY OF FRESNO

DEPARTMENT OF PUBLIC WORKS AND PLANNING
GROUNDING DETAILS

DRAWING NO. ##### SHEET NO. E10 TOTAL 12

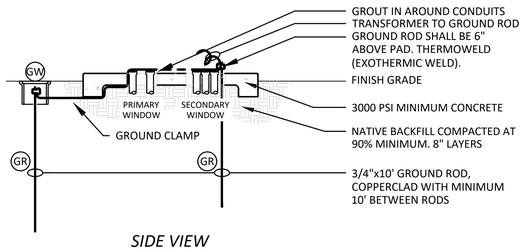


*SIDE VIEW*
*(CUT THROUGH AT CONDUIT OPENINGS)*

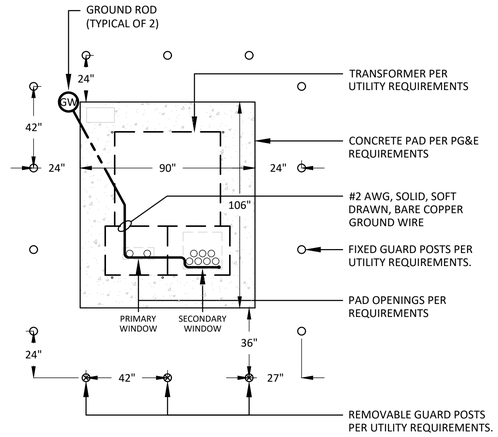


*TOP VIEW*

## TRANSFORMER PAD INSTALLATION - VERIFY WITH UTILITY

1) KEEP 8' FOR WORKING CLEARANCE IN FRONT OF OPERABLE SIDES.
2) GROUND WIRE SHALL BE CONTINUOUS FROM OUTSIDE GROUND UNDER PAD UP THROUGH PRIMARY WINDOW TO GROUND ROD IN SECONDARY WINDOW.
3) A 6' MINIMUM SEPARATION SHALL BE MAINTAINED BETWEEN GROUND RODS.
4) GROUT IN AROUND CONDUITS.

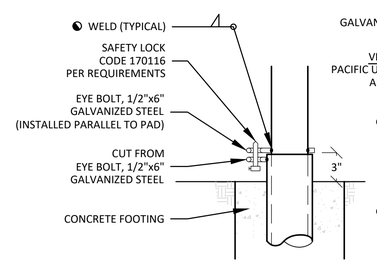


*DETAIL "A"*

WELDS SHALL BE PAINTED OVER WITH A ZINC PRIMER

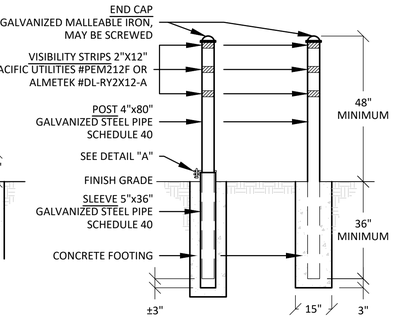


*REMOVABLE POST* *FIXED POST*

## GUARD POST

REMOVABLE OR FIXED GUARD POSTS, AS REQUIRED BY PLANS.

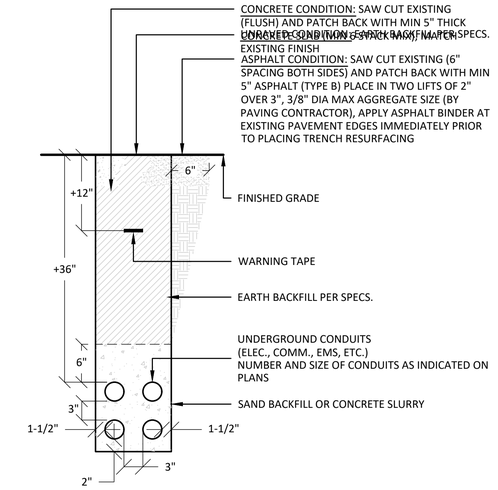


## ELECTRICAL TRENCH

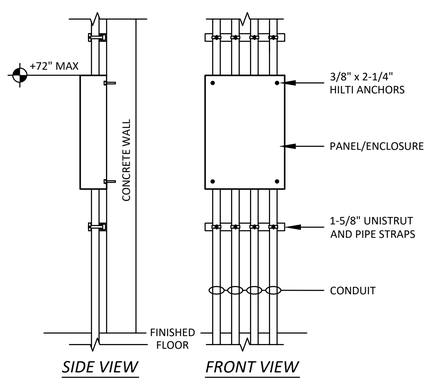


*SIDE VIEW* *FRONT VIEW*

## PANEL SURFACE MOUNT

**Issued For Construction**

JOB: FC-PW041.2

DATE: May 2024

DSGN: AR/WCH
DRWN: WCH
UPD: WCH
FILE: E11-Electrical Details-
PLOT: 5/3/2024 4:00 PM

REGISTERED PROFESSIONAL ENGINEER ABDUR REHMAN No. 22090 ELECTRICAL STATE OF CALIFORNIA

DATE: 5/3/2024


**ELECTRICAL POWER SYSTEMS**
ENGINEERING SOLUTIONS
2187 Herndon Ave #102 Clovis CA 93611 (559) 221-7230
JOE PREVENDAR P.E. CA EE 16581 joe@epsfresno.com
ABDUR REHMAN P.E. CA EE 22090 abdur@epsfresno.com




| | DATE | RECORD DRAWING | |
|---|---|---|---|
| DESIGNED: | | RESIDENT ENGINEER | DATE |
| DRAWN: | | | |
| CHECKED: | | | |

FOR RIGHT OF WAY DATA AND ACCURATE ACCESS DETERMINATION, SEE DOCUMENTS IN THE DEPARTMENT OF PUBLIC WORKS AND PLANNING.

SCALE
HORIZ 0 10' 20'
VERT 0 1' 2'

#### DATE

PROJECT
DEPARTMENT OF INTERNAL SERVICES
REEDLEY RADIO TOWER EQUIPMENT SHELTER

THE COUNTY OF FRESNO

DEPARTMENT OF PUBLIC WORKS AND PLANNING
ELECTRICAL DETAILS

DRAWING NO. ##### SHEET NO. E11 TOTAL 12

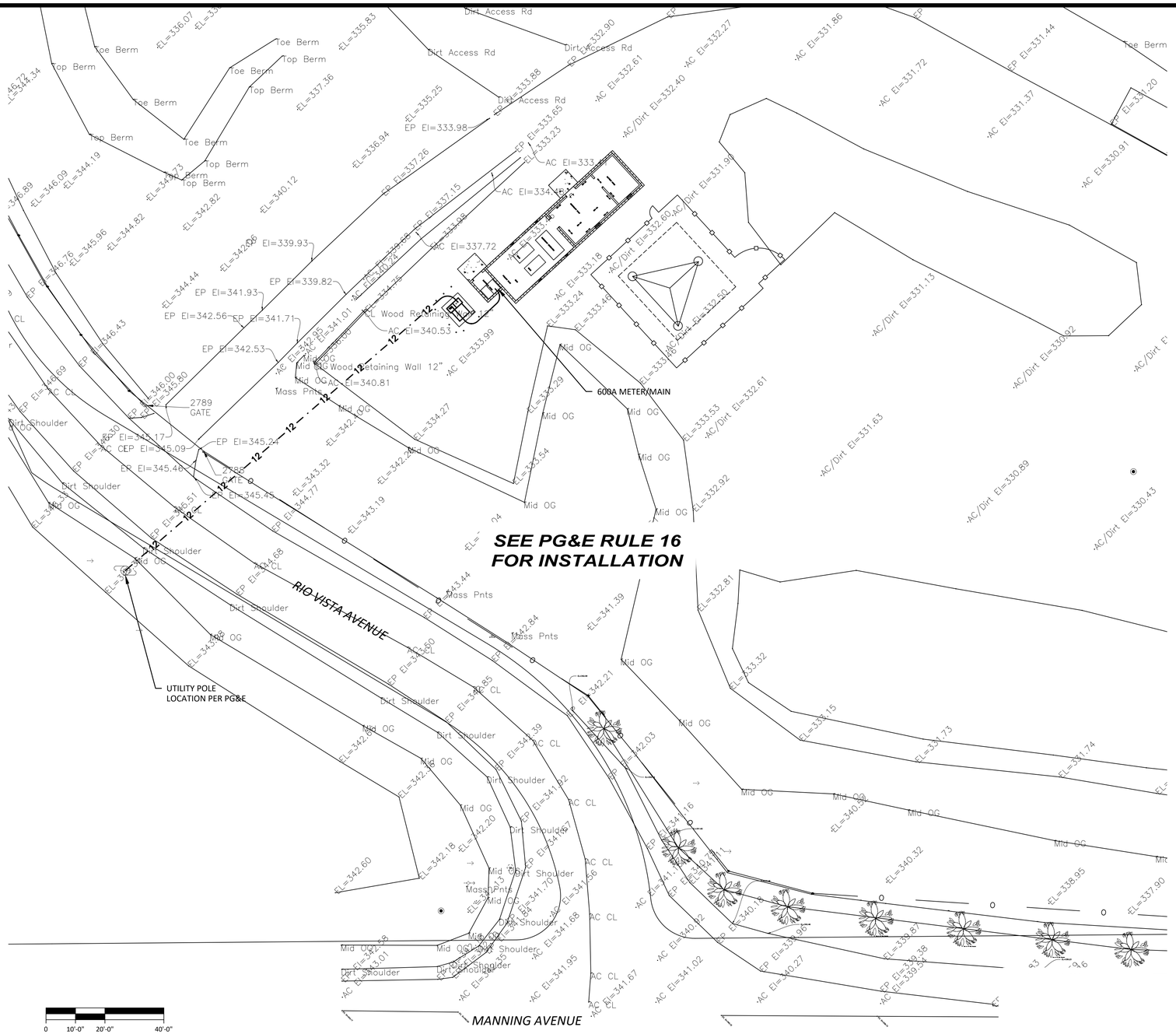


## ELECTRICAL SERVICE SITE PLAN

SCALE: 1" = 20'

WARNING
POWER LINES
OVERHEAD

811 Know what's below. Call before you dig.

| Issued For Construction |
|---|
| JOB:FC-PW041.2 |
| DATE: April 2024 |
| DSGN: AR/WCH |
| DRWN: WCH |
| UPD: WCH |
| FILE: E12-Survey Site Plan- |
| PLOT: 5/7/2024 12:51 PM |

REGISTERED PROFESSIONAL ENGINEER ABDUR REHMAN No. 22090 ELECTRICAL STATE OF CALIFORNIA

DATE: 5/7/2024


**ELECTRICAL POWER SYSTEMS**
ENGINEERING SOLUTIONS
2187 Herndon Ave #102 Clovis CA 93611 (559) 221-7230
JOE PREVENDAR P.E. CA EE 16581 joe@epsfresno.com
ABDUR REHMAN P.E. CA EE 22090 abdur@epsfresno.com




| | DATE | RECORD DRAWING | DATE |
|---|---|---|---|
| DESIGNED: | | RESIDENT ENGINEER | |
| DRAWN: | | | |
| CHECKED: | | | |

FOR RIGHT OF WAY DATA AND ACCURATE ACCESS DETERMINATION, SEE DOCUMENTS IN THE DEPARTMENT OF PUBLIC WORKS AND PLANNING.

SCALE
HORIZ 0 10' 20'
VERT 0 1' 2'

#### DATE

PROJECT
DEPARTMENT OF INTERNAL SERVICES
REEDLEY RADIO TOWER EQUIPMENT SHELTER

THE COUNTY OF FRESNO

DEPARTMENT OF PUBLIC WORKS AND PLANNING
ELECTRICAL SERVICE SITE PLAN

DRAWING NO. ##### SHEET NO. E12 TOTAL 12

STATE OF CALIFORNIA

## Indoor Lighting

CALIFORNIA ENERGY COMMISSION

| CERTIFICATE OF COMPLIANCE | NRCC-LTI-E |
|---|---|
| *This document is used to demonstrate compliance with requirements in 110.9, 110.12(c), 130.0, 130.1, 140.6 and 141.0(b)2 for indoor lighting scopes using the prescriptive path for nonresidential and hotel/motel occupancies. It is also used to document compliance with requirements in 160.5, 170.2(e) and 180.2(b)4 for indoor lighting scopes using the prescriptive path for multifamily occupancies. Multifamily includes dormitory and senior living facilities.* | |
| **Project Name:** Reedley Tower | **Report Page:** (Page 1 of 8) |
| **Project Address:** | **Date Prepared:** 2023-09-14T18:32:49-04:00 |

### A. GENERAL INFORMATION

| | | | | | |
|---|---|---|---|---|---|
| 01 | Project Location (city) | Reedley | 04 | Total Conditioned Floor Area ($ft^2$) | 834 |
| 02 | Climate Zone | 13 | 05 | Total Unconditioned Floor Area ($ft^2$) | 48 |
| 03 | Occupancy Types Within Project (select all that apply): | | 06 | # of Stories (Habitable Above Grade) | 1 |

- All Other Occupancies

### B. PROJECT SCOPE

*This table includes any lighting systems that are within the scope of the permit application and are demonstrating compliance using the prescriptive path outlined in 140.6 / 170.2(e) or 141.0(b)2 / 180.2(b)4 for alterations.*

| Scope of Work | Conditioned Spaces | | Unconditioned Spaces | |
|---|---|---|---|---|
| 01 | 02 | 03 | 04 | 05 |
| My Project Consists of (check all that apply): | Calculation Method | Area ($ft^2$) | Calculation Method | Area ($ft^2$) |
| ☒ New Lighting System | Complete Building Method | 834 | Complete Building Method | 48 |
| ☐ New Lighting System - Parking Garage | N/A | 0 | N/A | 0 |
| **Total Area of Work ($ft^2$)** | 834 | | 48 | |

---

STATE OF CALIFORNIA

## Indoor Lighting

CALIFORNIA ENERGY COMMISSION

| CERTIFICATE OF COMPLIANCE | NRCC-LTI-E |
|---|---|
| **Project Name:** Reedley Tower | **Report Page:** (Page 2 of 8) |
| | **Date Prepared:** 2023-09-14T18:32:49-04:00 |

### C. COMPLIANCE RESULTS

*If any cell on this table says "DOES NOT COMPLY" or "COMPLIES with Exceptional Conditions" refer to Table D. for guidance.*

| Lighting in conditioned and unconditioned spaces must not be combined for compliance per 140.6(b)1 / 170.2(e) | Allowed Lighting Power per 140.6(b) / 170.2(e) (Watts) | | | | | | | Adjusted Lighting Power per 140.6(a) / 170.2(e) (Watts) | | | | Compliance Results |
|---|---|---|---|---|---|---|---|---|---|---|---|---|
| | 01 | 02 | 03 | 04 | | 05 | | 06 | 07 | | 08 | 09 |
| | Complete Building 140.6(c)1 | Area Category 140.6(c)2 / 170.2(e)4 | Area Category Additional 140.6(c)2G / 170.2(e)4Av ( +) | Tailored 140.6(c)3 / 170.2(e)4B ( +) | = | **Total Allowed** (Watts) | ≥ | Total Designed (Watts) | Adjustments PAF Lighting Control Credits 140.6(a)2 / 170.2(e)1B (-) | = | **Total Adjusted** (Watts) *Includes Adjustments | **05 must be >= 08 140.6 / 170.2(e)** |
| | (See Table I) | (See Table I) | (See Table J) | (See Table K) | | | | (See Table F) | (See Table P) | | | |
| **Conditioned** | 333.6 | | | | = | 333.6 | ≥ | 290 | | = | 290 | COMPLIES |
| **Unconditioned** | 19.2 | | | | = | 19.2 | ≥ | 19 | | = | 19 | COMPLIES |
| **Controls Compliance (See Table H for Details)** | | | | | | | | | | | | COMPLIES |
| **Rated Power Reduction Compliance (See Table Q for Details)** | | | | | | | | | | | | |

### D. EXCEPTIONAL CONDITIONS

*This table is auto-filled with uneditable comments because of selections made or data entered in tables throughout the form.*

### E. ADDITIONAL REMARKS

*This table includes remarks made by the permit applicant to the Authority Having Jurisdiction.*

{General Remarks} Radio Tower Communications Equipment Building

---

STATE OF CALIFORNIA

## Indoor Lighting

CALIFORNIA ENERGY COMMISSION

| CERTIFICATE OF COMPLIANCE | NRCC-LTI-E |
|---|---|
| **Project Name:** Reedley Tower | **Report Page:** (Page 3 of 8) |
| | **Date Prepared:** 2023-09-14T18:32:49-04:00 |

### F. INDOOR LIGHTING FIXTURE SCHEDULE

*This table includes all planned permanent and portable lighting other than dwelling unit/ hotel/ motel room lighting. Multifamily dwelling unit and hotel/motel room lighting is documented in Table T. If using Table T to document lighting in multifamily common use areas providing shared provisions for living, eating, cooking or sanitation, those luminaires are not included here.*

**Designed Wattage: Conditioned Spaces**

| 01 | 02 | 03 | 04 | 05 | 06 | 07 | 08 | 09 | 10 | |
|---|---|---|---|---|---|---|---|---|---|---|
| Name or Item Tag | Complete Luminaire Description | Modular (Track) Fixture | Small Aperture & Color Change[1] | Watts per luminaire[2] | How is Wattage determined | Total Number of Luminaires | Excluded per 140.6(a)3 / 170.2(e)2C | Design Watts | Field Inspector | |
| | | | | | | | | | Pass | Fail |
| A | 4' Vapor Tight Strip | No | NA | 29 | Mfr. Spec | 5 | No | 145 | ☐ | ☐ |
| AE | 4' Vapor Tight Strip with Emergency Battery | No | NA | 29 | Mfr. Spec | 5 | No | 145 | ☐ | ☐ |
| X1 | Exit Sign | No | NA | 4 | Mfr. Spec | 3 | Exempt | --- | ☐ | ☐ |
| | | | | | | | **Total Designed Watts: CONDITIONED SPACES** | 290 | | |

**Designed Wattage: Unconditioned Spaces**

| 01 | 02 | 03 | 04 | 05 | 06 | 07 | 08 | 09 | 10 | |
|---|---|---|---|---|---|---|---|---|---|---|
| Name or Item Tag | Complete Luminaire Description | Modular (Track) Fixture | Small Aperture & Color Change[1] | Watts per luminaire[2] | How is Wattage determined | Total Number of Luminaires | Excluded per 140.6(a)3 / 170.2(e)2C | Design Watts | Field Inspector | |
| | | | | | | | | | Pass | Fail |
| BE | 2' Vapor Tight Strip with Emergency Battery | No | NA | 19 | Mfr. Spec | 1 | No | 19 | ☐ | ☐ |
| | | | | | | | **Total Designed Watts: UNCONDITIONED SPACES** | 19 | | |

[1] *FOOTNOTE: Design Watts for small aperture and color changing luminaires which qualify per 140.6(a)4B / 170.2(e)2D is adjusted to be 75% /80% of their rated wattage. Table F automatically makes this adjustment, the permit applicant should enter full rated wattage in column 05.*

[2] *Authority Having Jurisdiction may ask for Luminaire cut sheets to confirm wattage used for compliance per 130.0(c) / 160.5(b). Wattage used must be the maximum rated for the luminaire, not the lamp.*

### G. MODULAR LIGHTING SYSTEMS

*This section does not apply to this project.*

---

STATE OF CALIFORNIA

## Indoor Lighting

CALIFORNIA ENERGY COMMISSION

| CERTIFICATE OF COMPLIANCE | NRCC-LTI-E |
|---|---|
| **Project Name:** Reedley Tower | **Report Page:** (Page 4 of 8) |
| | **Date Prepared:** 2023-09-14T18:32:49-04:00 |

### H. INDOOR LIGHTING CONTROLS (Not including PAFs)

*This table includes lighting controls for conditioned and unconditioned spaces.*

**Building Level Controls**

| 01 | 02 | 03 | |
|---|---|---|---|
| Mandatory Demand Response 110.12(c) | Shut-off controls 130.1(c) / 160.5(b)4C | Field Inspector | |
| | | Pass | Fail |
| NA < 4,000W subject to multilevel | See Area/Space Level Controls | ☐ | ☐ |

**Area Level Controls**

| 04 | 05 | 06 | 07 | 08 | 09 | 10 | 11 | 12 | |
|---|---|---|---|---|---|---|---|---|---|
| Area Description | Complete Building or Area Category Primary Function Area | Manual Area Controls 130.1(a) / 160.5(b)4A | Multi-Level Controls 130.1(b) / 160.5(b)4B | Shut-Off Controls 130.1(c) // 160.5(b)4C | Primary/Sky lit Daylighting 130.1(d) / 160.5(b)4D | Secondary Daylighting 130.1(d) / 160.5(b)4D | Interlocked Systems 140.6(a)1/ 170.2(e)2A | Field Inspector | |
| | | | | | | | | Pass | Fail |
| Battery Room | All Other Occupancies | Readily Accessible | NA: General Ltg <= 0.5W/SF | NA: Elec. equip. rm | NA: Not daylit zone | NA: Not daylit zone | No | ☐ | ☐ |
| Primary Rack Room | All Other Occupancies | Readily Accessible | Dimmer | NA: Elec. equip. rm | NA: Not daylit zone | NA: Not daylit zone | No | ☐ | ☐ |
| Secondary Rack Room | All Other Occupancies | Readily Accessible | Dimmer | NA: Elec. equip. rm | NA: Not daylit zone | NA: Not daylit zone | No | ☐ | ☐ |
| Utility Electrical Room | All Other Occupancies | Readily Accessible | NA: Enclosed area <100SF | NA: Elec. equip. rm | NA: Not daylit zone | NA: Not daylit zone | No | ☐ | ☐ |
| | | | | | 13 | | | | |
| | | | | | Plan Sheet Showing Daylit Zones: | | | | |

---

STATE OF CALIFORNIA

## Indoor Lighting

CALIFORNIA ENERGY COMMISSION

| CERTIFICATE OF COMPLIANCE | NRCC-LTI-E |
|---|---|
| **Project Name:** Reedley Tower | **Report Page:** (Page 5 of 8) |
| | **Date Prepared:** 2023-09-14T18:32:49-04:00 |

### I. LIGHTING POWER ALLOWANCE: COMPLETE BUILDING OR AREA CATEGORY METHODS

*Each area complying using the Complete Building or Area Category Methods per 140.6(b) are included in this table. Column 06 indicates if additional lighting power allowances per 140.6(c) or adjustments per 140.6(a) are being used .*

**Conditioned Spaces**

| 01 | 02 | 03 | 04 | 05 | 06 | |
|---|---|---|---|---|---|---|
| Area Description | Complete Building or Area Category Primary Function Area | Allowed Density ($W/ft^2$) | Area ($ft^2$) | Allowed Wattage (Watts) | Additional Allowance / Adjustment | |
| | | | | | Area Category | PAF |
| Battery Room | All Other Occupancies | 0.4 | 146 | 58.4 | No | No |
| Primary Rack Room | All Other Occupancies | 0.4 | 393 | 157.19 | No | No |
| Secondary Rack Room | All Other Occupancies | 0.4 | 295 | 118 | No | No |
| | | **TOTALS:** | 834 | 333.6 | See Tables J, or P for detail | |

**Unconditioned Spaces**

| 01 | 02 | 03 | 04 | 05 | 06 | |
|---|---|---|---|---|---|---|
| Area Description | Complete Building or Area Category Primary Function Area | Allowed Density ($W/ft^2$) | Area ($ft^2$) | Allowed Wattage (Watts) | Additional Allowance / Adjustment | |
| | | | | | Area Category | PAF |
| Utility Electrical Room | All Other Occupancies | 0.4 | 48 | 19.2 | No | No |
| | | **TOTALS:** | 48 | 19.2 | See Tables J, or P for detail | |

### J. ADDITIONAL ALLOWANCE: AREA CATEGORY METHOD QUALIFYING LIGHTING SYSTEM

*This section does not apply to this project.*

### K. TAILORED METHOD GENERAL LIGHTING POWER ALLOWANCE

*This section does not apply to this project.*

### L. ADDITIONAL LIGHTING ALLOWANCE: TAILORED WALL DISPLAY

*This section does not apply to this project.*

---

STATE OF CALIFORNIA

## Indoor Lighting

CALIFORNIA ENERGY COMMISSION

| CERTIFICATE OF COMPLIANCE | NRCC-LTI-E |
|---|---|
| **Project Name:** Reedley Tower | **Report Page:** (Page 6 of 8) |
| | **Date Prepared:** 2023-09-14T18:32:49-04:00 |

### M. ADDITIONAL LIGHTING ALLOWANCE: TAILORED FLOOR AND TASK LIGHTING

*This section does not apply to this project.*

### N. ADDITIONAL LIGHTING ALLOWANCE: TAILORED DECORATIVE /SPECIAL EFFECTS

*This section does not apply to this project.*

### O. ADDITIONAL LIGHTING ALLOWANCE: TAILORED VERY VALUABLE MERCHANDISE

*This section does not apply to this project.*

### P. POWER ADJUSTMENT: LIGHTING CONTROL CREDIT (POWER ADJUSTMENT FACTOR (PAF))

*This section does not apply to this project.*

### Q. RATED POWER REDUCTION COMPLIANCE FOR ONE-FOR-ONE ALTERATIONS

*This section does not apply to this project.*

### R. 80% LIGHTING POWER FOR ALL ALTERATIONS - CONTROLS EXCEPTIONS

*This section does not apply to this project.*

### S. DAYLIGHT DESIGN POWER ADJUSTMENT FACTOR (PAF)

*This section does not apply to this project.*

### T. DWELLING UNIT LIGHTING

*This section does not apply to this project.*

---

STATE OF CALIFORNIA

## Indoor Lighting

CALIFORNIA ENERGY COMMISSION

| CERTIFICATE OF COMPLIANCE | NRCC-LTI-E |
|---|---|
| **Project Name:** Reedley Tower | **Report Page:** (Page 7 of 8) |
| | **Date Prepared:** 2023-09-14T18:32:49-04:00 |

### U. DECLARATION OF REQUIRED CERTIFICATES OF INSTALLATION

*Selections have been made based on information provided in this document. If any selections have been changed by permit applicant, an explanation should be included in Table E. Additional Remarks. These documents must be provided to the building inspector during construction and can be found online*

| Form/Title |
|---|
| NRCI-LTI-E - Must be submitted for all buildings |

### V. DECLARATION OF REQUIRED CERTIFICATES OF ACCEPTANCE

*There are no NRCA forms required for this project.*

---

STATE OF CALIFORNIA

## Indoor Lighting

CALIFORNIA ENERGY COMMISSION

| CERTIFICATE OF COMPLIANCE | NRCC-LTI-E |
|---|---|
| **Project Name:** Reedley Tower | **Report Page:** (Page 8 of 8) |
| **Project Address:** | **Date Prepared:** 2023-09-14T18:32:49-04:00 |

### DOCUMENTATION AUTHOR'S DECLARATION STATEMENT

**I certify that this Certificate of Compliance documentation is accurate and complete.**

| | |
|---|---|
| Documentation Author Name: CHANDLER HUBBARD | Documentation Author Signature: Chandler Hubbard |
| Company: Electrical Power Systems | Signature Date: 9/15/2023 |
| Address: 2187 HERNDON AVE #102 | CEA/ HERS Certification Identification (if applicable): |
| City/State/Zip: CLOVIS CA 93611 | Phone: (559) 221-7230 |

### RESPONSIBLE PERSON'S DECLARATION STATEMENT

I certify the following under penalty of perjury, under the laws of the State of California:

1. The information provided on this Certificate of Compliance is true and correct.
2. I am eligible under Division 3 of the Business and Professions Code to accept responsibility for the building design or system design identified on this Certificate of Compliance (responsible designer)
3. The energy features and performance specifications, materials, components, and manufactured devices for the building design or system design identified on this Certificate of Compliance conform to the requirements of Title 24, Part 1 and Part 6 of the California Code of Regulations.
4. The building design features or system design features identified on this Certificate of Compliance are consistent with the information provided on other applicable compliance documents, worksheets, calculations, plans and specifications submitted to the enforcement agency for approval with this building permit application.
5. I will ensure that a completed signed copy of this Certificate of Compliance shall be made available with the building permit(s) issued for the building, and made available to the enforcement agency for all applicable inspections. I understand that a completed signed copy of this Certificate of Compliance is required to be included with the documentation the builder provides to the building owner at occupancy.

| | |
|---|---|
| Responsible Designer Name: JOE PREVENDAR | Responsible Designer Signature: J Prevendar |
| Company: ELECTRICAL POWER SYSTEMS, INC. | Date Signed: 9/15/2023 |
| Address: 2187 HERNDON AVE #102 | License: CA EE 16581 |
| City/State/Zip: CLOVIS CA 93611 | Phone: (559) 221-7230 |

---

STATE OF CALIFORNIA

## Outdoor Lighting

CALIFORNIA ENERGY COMMISSION

| CERTIFICATE OF COMPLIANCE | NRCC-LTO-E |
|---|---|
| *This document is used to demonstrate compliance with requirements in 110.9, 130.0, 130.2, 140.7, and 141.0(b)2L for outdoor lighting scopes using the prescriptive path for nonresidential and hotel/motel occupancies. It is also used to document compliance with requirements in 160.5, 170.2(e)6, 180.1(a) and 180.2(b)4Bv for outdoor lighting scopes using the prescriptive path for multifamily and mixed-use occupancies. Multifamily includes dormitory and senior living facilities.* | |
| **Project Name:** Reedley Tower | **Report Page:** (Page 1 of 9) |
| **Project Address:** | **Date Prepared:** 2023-09-14T19:29:34-04:00 |

### A. GENERAL INFORMATION

| | | | | | |
|---|---|---|---|---|---|
| 01 | Project Location (city) | Reedley | 04 | Total Illuminated Hardscape Area ($ft^2$) | 400 |
| 02 | Climate Zone | 13 | | | |
| 03 | Outdoor Lighting Zone per Title 24 Part 1 10.114 or as designated by Authority Having Jurisdiction (AHJ): | | | | |
| ☐ | LZ-0: Very Low - Undeveloped Parkland | ☒ | LZ-2: Moderate - Urban Clusters | ☐ | LZ-4: High - Must be reviewed by CA Energy Commission for Approval |
| ☐ | LZ-1: Low - Rural Areas | ☐ | LZ-3: Moderately High - Urban Areas | | |
| 05 | Occupancy Types within Project | | | | |

- All Other Occupancies

### B. PROJECT SCOPE

*This table includes outdoor lighting systems that are within the scope of the permit application and are demonstrating compliance using the prescriptive path outlined in 140.7 / 170.2(e)6 or 141.0(b)2L / 180.2(b)4Bv for alterations.*

**My Project Consists of:**

| 01 | 02 | |
|---|---|---|
| ☒ New Lighting System | Must Comply with Allowances from 140.7 / 170.2(e)6 | |
| ☐ Altered Lighting System | Is your alteration increasing the connected lighting load (Watts)? ○ Yes ○ No | |
| 03 | 04 | 05 |
| % of Existing Luminaires Being Altered[1] | Sum Total of Luminaires Being Added or Altered | Calculation Method |
| ☐ < 10% ☐ >= 10% and < 50% ☐ >= 50% | | |

***Please proceed to Table F. Outdoor Lighting Fixture Schedule to define the project's luminaires.***

[1] *FOOTNOTES: % of Existing Luminaires Being Altered = (Sum Total of Luminaires Being Added or Altered / Existing Luminaires within the Scope of the Permit Application) x 100.*

---

STATE OF CALIFORNIA

## Outdoor Lighting

CALIFORNIA ENERGY COMMISSION

| CERTIFICATE OF COMPLIANCE | NRCC-LTO-E |
|---|---|
| **Project Name:** Reedley Tower | **Report Page:** (Page 2 of 9) |
| | **Date Prepared:** 2023-09-14T19:29:34-04:00 |

### C. COMPLIANCE RESULTS

*Results in this table are automatically calculated from data input and calculations in Tables F through N. Note: If any cell on this table says "COMPLIES with Exceptional Conditions" refer to Table D. Exceptional Conditions for guidance or see applicable Table referenced below.*

| Calculations of Total Allowed Lighting Power (Watts) 140.7 / 170.2(e)6 or 141.0(b)2L / 180.2(b)4Bv | | | | | | | | | | | | Compliance Results | | | |
|---|---|---|---|---|---|---|---|---|---|---|---|---|---|---|---|
| 01 | | 02 | | 03 | | 04 | | 05 | | 06 | | 07 | | 08 | 09 |
| General Hardscape Allowance 140.7(d)1 / 170.2(e)6 (See Table I) | + | Per Application 140.7(d)2 / 170.2(e)6 (See Table J) | + | Sales Frontage 140.7(d)2 (See Table K) | + | Ornamental 140.7(d)2 / 170.2(e)6 (See Table L) | + | Per Specific Area 140.7(d)2 / 170.2(e)6 (See Table M) | OR | Existing Power Allowance 141.0(b)2L / 180.2(b)4Bv (See Table N) | = | **Total Allowed** (Watts) | ≥ | **Total Actual** (Watts) | **07 must be >= 08** |
| 232.2 | + | 30 | + | --- | + | --- | + | --- | OR | --- | = | 262.2 | ≥ | 96 | COMPLIES |
| **Shielding Compliance (See Table G for Details)** | | | | | | | | | | | | | | | COMPLIES |
| **Controls Compliance (See Table H for Details)** | | | | | | | | | | | | | | | COMPLIES |

### D. EXCEPTIONAL CONDITIONS

*This table is auto-filled with uneditable comments because of selections made or data entered in tables throughout the form.*

### E. ADDITIONAL REMARKS

*This table includes remarks made by the permit applicant to the Authority Having Jurisdiction.*

{General Remarks} Exterior of Radio Communications Electrical Building

---

STATE OF CALIFORNIA

## Outdoor Lighting

CALIFORNIA ENERGY COMMISSION

| CERTIFICATE OF COMPLIANCE | NRCC-LTO-E |
|---|---|
| **Project Name:** Reedley Tower | **Report Page:** (Page 3 of 9) |
| | **Date Prepared:** 2023-09-14T19:29:34-04:00 |

### F. OUTDOOR LIGHTING FIXTURE SCHEDULE

*For new or altered lighting systems demonstrating compliance with 140.7 / 170.2(e)6 all new luminaires being installed and any existing luminaires remaining or being moved within the spaces covered by the permit application are included in the Table below. For altered lighting systems using the Existing Power method per 141.0(b)2L only new luminaires being installed and replacement luminaires being installed as part of the project scope are included (ie, existing luminaires remaining or existing luminaires being moved are not included). Outdoor lighting attached to multifamily buildings and controlled from the inside of a dwelling unit are included in Table H. and are not included here. All other multifamily outdoor lighting is included here.*

**Designed Wattage:**

| 01 | 02 | | 03 | 04 | 05 | 06 | 07 | 08 | 09 | 10 | |
|---|---|---|---|---|---|---|---|---|---|---|---|
| Name or Item Tag | Complete Luminaire Description | | Watts per luminaire[1, 2] | How is Wattage determined | Total Number Luminaires[2] | Luminaire Status[3] | Excluded per 140.7(a) / 170.2(e)6A | Design Watts | Cutoff Req. > 6,200 initial lumen output 130.2(b) / 160.5(c)1[4] | Field Inspector | |
| | | | | | | | | | | Pass | Fail |
| D | Wallpack | ☐ Linear | 24 | Mfr. Spec | 4 | New | ☐ | 96 | Provided | ☐ | ☐ |
| E1 | Exit Bug | ☐ Linear | 8 | Mfr. Spec | 2 | New | ☒ | --- | NA: Not permitted by H&LS | ☐ | ☐ |
| | | | | | | | **Total Design Watts:** | 96 | | | |

* NOTES: Selections with a * require a note in the space below explaining how compliance is achieved.
*EX: Luminaire is lighting a statue; EXCEPTION 2 to 130.2(b)*

[1] *FOOTNOTES: Authority Having Jurisdiction may ask for Luminaire cut sheets to confirm wattage used for compliance per 130.0(c) / 160.5(b)*

[2] *For linear luminaires, wattage should be indicated as W/lf instead of Watts/luminaire. Total linear feet should be indicated in column 05 instead of number of luminaires.*

[3] *Select "New" for new luminaires in a new outdoor lighting project, or for added luminaires in an alteration. Select "Altered" for replacement luminaires in an alteration. Select "Existing to Remain" for existing luminaires within the project scope that are not being altered and are remaining. Select "Existing Reinstalled" for existing luminaires which are being removed and reinstalled as part of the project scope.*

[4] *Compliance with mandatory shielding requirements is required for luminaires with initial lumen output >= 6,200 unless exempted by 130.2(b)/ 160.5(c)*

---

STATE OF CALIFORNIA

## Outdoor Lighting

CALIFORNIA ENERGY COMMISSION

| CERTIFICATE OF COMPLIANCE | NRCC-LTO-E |
|---|---|
| **Project Name:** Reedley Tower | **Report Page:** (Page 4 of 9) |
| | **Date Prepared:** 2023-09-14T19:29:34-04:00 |

### G. SHIELDING REQUIREMENTS (BUG)

*This table includes fixtures of >=6,200 initial lumens indicated on Table F as needing to comply with Shielding Requirements. Maximum lumens can be found in Title 24, Part 11, Section 5.106.8.*

| 01 | 02 | 03 | 04 | 05 | 06 | 07 | 08 | 09 | 10 | 11 | 12 | |
|---|---|---|---|---|---|---|---|---|---|---|---|---|
| Name or Item Tag | Complete Luminaire Description | Backlight Rating[2] | | | Uplight Rating[2] | | | Glare Rating (Lumens)[2] | | | Field Inspector | |
| | | Mounting Height[1] | Max Allowable Backlight Rating[3] | Backlight Rating Per Design | Lighting type | Max Allowable Uplight Rating[3] | Uplight Rating Per Design | Mounting Height[1] | Max Allowable Glare Rating[3] | Glare Rating Per Design | Pass | Fail |
| D | Wallpack | 2 MH from property line | No Limit | B2 | All other outdoor lighting, including decorative | U2 | U0 | > 2 MH from property line | G2 | G0 | ☐ | ☐ |

[1] *FOOTNOTES: Mounting Height is labeled MH in this table.*

[2] *Authority Having Jurisdiction may ask for Luminaire cut sheets or other documentation to confirm luminaire type, uplight ratings and glare ratings used for compliance per 130.2(b)/ 160.5(c)*

[3] *BUG ratings with a lower number than the 'Max Allowable' are compliant. Ex. If Max Allowable is Bug Rating B4, then B0, B1, B2 and B3 are all compliant.*

---

STATE OF CALIFORNIA

## Outdoor Lighting

CALIFORNIA ENERGY COMMISSION

| CERTIFICATE OF COMPLIANCE | NRCC-LTO-E |
|---|---|
| **Project Name:** Reedley Tower | **Report Page:** (Page 5 of 9) |
| | **Date Prepared:** 2023-09-14T19:29:34-04:00 |

### H. OUTDOOR LIGHTING CONTROLS

*This table demonstrates compliance with controls requirements for all new or altered luminaires installed as part of the permit application. For alteration projects, luminaires which are existing to remain (ie untouched) and luminaires which are removed and reinstalled (wiring only) do not need to be included in this table even if they are within the spaces covered by the permit application.*
*Outdoor lighting for nonresidential buildings, parking garages and common service areas in multifamily buildings must be documented separately from outdoor lighting attached to multifamily buildings and controlled from the inside of a dwelling unit*

**Mandatory Controls for Nonresidential Occupancies, Parking Garages & Common Areas in Multifamily Buildings**

| 01 | 02 | 03 | 04 | 05 | |
|---|---|---|---|---|---|
| Area Description | Shut-Off 130.2(c)1 / 160.5(c) | Auto-Schedule 130.2(c)2 / 160.5(c) | Motion Sensor 130.2(c)3 / 160.5(c) | Field Inspector | |
| | | | | Pass | Fail |
| Building Exterior: "D" | Photocontrol | Provided | NA: Each Luminaire <= 40 Watts | ☐ | ☐ |
| Utility Electrical Room Entrance: "D" | Photocontrol | Provided | NA: Each Luminaire <= 40 Watts | ☐ | ☐ |
| Utility Electrical Room Entrance: "E1" | NA: Not permitted by H&LS | NA: Not permitted by H&LS | NA: Not permitted by H&LS | ☐ | ☐ |
| Building Entrance: "D" | Photocontrol | Provided | NA: Each Luminaire <= 40 Watts | ☐ | ☐ |
| Building Entrance: "E1" | NA: Not permitted by H&LS | NA: Not permitted by H&LS | NA: Not permitted by H&LS | ☐ | ☐ |

[1] *FOOTNOTE: Text has been abbreviated, please refer to Table 160.5-A to confirm compliance with the specific light source technologies listed.*

[2] *Authority having jurisdiction may ask for cutsheets or other documentation to confirm compliance of light source.*

[3] *Recessed luminaires marked for use in fire-rated installations, and recessed luminaires installed in non-insulated ceilings are excepted from ii and iii.*

---

STATE OF CALIFORNIA

## Outdoor Lighting

CALIFORNIA ENERGY COMMISSION

| CERTIFICATE OF COMPLIANCE | NRCC-LTO-E |
|---|---|
| **Project Name:** Reedley Tower | **Report Page:** (Page 6 of 9) |
| | **Date Prepared:** 2023-09-14T19:29:34-04:00 |

### I. LIGHTING POWER ALLOWANCE (per 140.7 / 170.2(e))

| This table includes areas using allowance calculations per 140.7 / 170.2(e). General Hardscape Allowance is per Table 140.7-A/Table 170.2-R while "Use it or lose it" Allowances are per Table 140.7-B /Table 170.2-S. Indicate which allowances are being used to expand sections for user input. Luminaires that qualify for one of the "Use it or lose it" allowances shall not qualify for another "Use it or lose it" allowance. Outdoor lighting attached to multifamily buildings and controlled from the inside of a dwelling unit are included in Table H. and are not included here. All other multifamily outdoor lighting is included here. | 01 | | | | |
|---|---|---|---|---|---|
| | ☒ General Hardscape Allowance Table I (below) | "Use it or lose it" Allowance (select all that apply) (select all that apply) | | | |
| | | ☒ Per Application Table J | ☐ Sales Frontage Table K | ☐ Ornamental Table L | ☐ Per Specific Area Table M |

Calculated General Hardscape Lighting Power Allowance per Table 140.7-A for Nonresidential & Hotel/Motel

| 02 | 03 | 04 | 05 | 06 | 07 | 08 | 09 |
|---|---|---|---|---|---|---|---|
| Area Description | Area Wattage Allowance (AWA) | | | Linear Wattage Allowance (LWA) | | | Total General AWA + LWA (Watts) |
| | Illuminated Area ($ft^2$) | Allowed Density ($W/ft^2$) | Area Allowance (Watts) | Perimeter Length (lf) | Allowed Density (W/lf) | Linear Allowance (Watts) | |
| Building Exterior | 400 | 0.019 | 7.6 | 164 | 0.15 | 24.6 | 32.2 |
| **Initial Wattage Allowance for Entire Site (Watts):** | | | | | | | 200 |
| **Instances of Initial Wattage Allowance (LZ 0 only)[1]** | | | | | | | |
| **Total General Hardscape Allowance (Watts):** | | | | | | | 232.2 |

---

STATE OF CALIFORNIA

## Outdoor Lighting

CALIFORNIA ENERGY COMMISSION

| CERTIFICATE OF COMPLIANCE | NRCC-LTO-E |
|---|---|
| **Project Name:** Reedley Tower | **Report Page:** (Page 7 of 9) |
| | **Date Prepared:** 2023-09-14T19:29:34-04:00 |

### J. LIGHTING ALLOWANCE: PER APPLICATION

*This table includes areas using the wattage allowance per application from Table 140.7-B / Table 170.2-S.*

| 01 | 02 | 03 | 04 | 05 | 06 | 07 | 08 | 09 | 10 |
|---|---|---|---|---|---|---|---|---|---|
| Area Description | Application per Table 140.7-B[1] | **CALCULATED ALLOWANCE (Watts)** | | | **DESIGN WATTS** | | | | Additional Allowance (Watts) |
| | | # of Locations | Allowance per Location[2] | Extra Allowance (Watts) | Luminaire Name or Item Tag | Watts per Luminaire | # of Luminaires | Design Watts | |
| Building Entrance | Building Entrance/Exit | 1 | 15 | 15 | D | 24 | 1 | 24 | 15 |
| | | | | | E1 | 8 | 1 | 8 | |
| Total Design Watts for this Area: | | | | | | | | 32 | |
| Utility Electrical Room Entrance | Building Entrance/Exit | 1 | 15 | 15 | D | 24 | 1 | 24 | 15 |
| | | | | | E1 | 8 | 1 | 8 | |
| Total Design Watts for this Area: | | | | | | | | 32 | |
| **Total Allowance (Watts) All Areas:** | | | | | | | | | 30 |

[1] *FOOTNOTES: Primary entrance applications are only available for senior care facilities, healthcare facilities, police stations, hospitals, fire stations, and emergency vehicle facilities.*

[2] *The Allowance per Location for ATMs is 100W for the first ATM and 35W for each additional per Table 140.7-B /Table 170.2-S.*

[3] *For luminaires indicated in Table F as linear, wattage in column 07 is W/lf instead of Watts/luminaire. Total linear feet should be indicated in column 08 instead of number of luminaires.*

### K. LIGHTING ALLOWANCE: SALES FRONTAGE

*This section does not apply to this project.*

### L. LIGHTING ALLOWANCE: ORNAMENTAL

*This section does not apply to this project.*

---

STATE OF CALIFORNIA

## Outdoor Lighting

CALIFORNIA ENERGY COMMISSION

| CERTIFICATE OF COMPLIANCE | NRCC-LTO-E |
|---|---|
| **Project Name:** Reedley Tower | **Report Page:** (Page 8 of 9) |
| | **Date Prepared:** 2023-09-14T19:29:34-04:00 |

### M. LIGHTING ALLOWANCE: PER SPECIFIC AREA

*This section does not apply to this project.*

### N. EXISTING CONDITIONS POWER ALLOWANCE (alterations only)

*This section does not apply to this project.*

### O. DECLARATION OF REQUIRED CERTIFICATES OF INSTALLATION

*Selections have been made based on information provided in this document. If any selection has been changed by permit applicant, an explanation should be included in Table E. Additional Remarks. These documents must be provided to the building inspector during construction and can be found online*

| Form/Title |
|---|
| NRCI-LTO-E - Must be submitted for all buildings |

### P. DECLARATION OF REQUIRED CERTIFICATES OF ACCEPTANCE

*Selections have been made based on information provided in this document. If any selection has been changed by permit applicant, an explanation should be included in Table E. Additional Remarks. These documents must be provided to the building inspector during construction and must be completed through an Acceptance Test Technician Certification Provider (ATTCP). For more information visit: http://www.energy.ca.gov/title24/attcp/providers.html*

| Form/Title | Systems/Spaces To Be Field Verified |
|---|---|
| NRCA-LTO-02-A - Must be submitted for all outdoor lighting controls except for alterations where controls are added to <= 20 luminaires. | Building Exterior: "D"; Utility Electrical Room Entrance: "D"; Utility Electrical Room Entrance: "E1"; Building Entrance: "D"; Building Entrance: "E1" |

---

STATE OF CALIFORNIA

## Outdoor Lighting

CALIFORNIA ENERGY COMMISSION

| CERTIFICATE OF COMPLIANCE | NRCC-LTO-E |
|---|---|
| **Project Name:** Reedley Tower | **Report Page:** (Page 9 of 9) |
| **Project Address:** | **Date Prepared:** 2023-09-14T19:29:34-04:00 |

### DOCUMENTATION AUTHOR'S DECLARATION STATEMENT

**I certify that this Certificate of Compliance documentation is accurate and complete.**

| | |
|---|---|
| Documentation Author Name: CHANDLER HUBBARD | Documentation Author Signature: Chandler Hubbard |
| Company: Electrical Power Systems | Signature Date: 9/15/2023 |
| Address: 2187 HERNDON AVE #102 | CEA/ HERS Certification Identification (if applicable): |
| City/State/Zip: CLOVIS CA 93611 | Phone: (559) 221-7230 |

### RESPONSIBLE PERSON'S DECLARATION STATEMENT

I certify the following under penalty of perjury, under the laws of the State of California:

1. The information provided on this Certificate of Compliance is true and correct.
2. I am eligible under Division 3 of the Business and Professions Code to accept responsibility for the building design or system design identified on this Certificate of Compliance (responsible designer)
3. The energy features and performance specifications, materials, components, and manufactured devices for the building design or system design identified on this Certificate of Compliance conform to the requirements of Title 24, Part 1 and Part 6 of the California Code of Regulations.
4. The building design features or system design features identified on this Certificate of Compliance are consistent with the information provided on other applicable compliance documents, worksheets, calculations, plans and specifications submitted to the enforcement agency for approval with this building permit application.
5. I will ensure that a completed signed copy of this Certificate of Compliance shall be made available with the building permit(s) issued for the building, and made available to the enforcement agency for all applicable inspections. I understand that a completed signed copy of this Certificate of Compliance is required to be included with the documentation the builder provides to the building owner at occupancy.

| | |
|---|---|
| Responsible Designer Name: JOE PREVENDAR | Responsible Designer Signature: J Prevendar |
| Company: ELECTRICAL POWER SYSTEMS, INC. | Date Signed: 9/15/2023 |
| Address: 2187 HERNDON AVE #102 | License: CA EE 16581 |
| City/State/Zip: CLOVIS CA 93611 | Phone: (559) 221-7230 |

---

**Issued For Construction**

JOB:FC-PW041.2
DATE: April 2024
DSGN: AR/WCH
DRWN: WCH
UPD: WCH
FILE: E13-Title 24-
PLOT: 5/7/2024 12:51 PM

ABDUR REHMAN
No. 22090
DATE: 5/7/2024

**ELECTRICAL POWER SYSTEMS**
ENGINEERING SOLUTIONS
2187 Herndon Ave #102 Clovis CA 93611 (559) 221-7230
JOE PREVENDAR P.E. CA EE 16581 ABDUR REHMAN P.E. CA EE 22090
joe@epsfresno.com abdur@epsfresno.com

EPS IS RESPONSIBLE FOR ELECTRICAL SYSTEMS DESIGN ONLY. EPS IS NOT RESPONSIBLE FOR ELECTRICAL SAFETY WORK PROCEDURES AND/OR USE OF REQUIRED PERSONAL PROTECTIVE EQUIPMENT. SEE NFPA 70E "STANDARD FOR ELECTRICAL SAFETY IN THE WORKPLACE" AND OSHA 29 CFR. CONTRACTOR MUST READ SPECIFICATIONS AND INSTALL MATERIAL AS PER SPECIFICATIONS AND/OR PLANS OR AS PER E.P.S. APPROVAL. PLANS AND SPECIFICATIONS ONLY APPLY TO THE PROJECT FOR WHICH THEY WERE CREATED.

| | DATE | RECORD DRAWING | | SCALE | | PROJECT | DEPARTMENT OF PUBLIC WORKS AND PLANNING |
|---|---|---|---|---|---|---|---|
| DESIGNED: | | RESIDENT ENGINEER | DATE | HORIZ 0 10' 20' | | DEPARTMENT OF INTERNAL SERVICES | TITLE 24 |
| DRAWN: | | | | VERT 0 1' 2' | #### DATE | REEDLEY RADIO TOWER EQUIPMENT SHELTER | |
| CHECKED: | | | | | | | DRAWING NO. ##### SHEET NO. E13 TOTAL 12 |

FOR RIGHT OF WAY DATA AND ACCURATE ACCESS DETERMINATION, SEE DOCUMENTS IN THE DEPARTMENT OF PUBLIC WORKS AND PLANNING.

GENERAL PLUMBING NOTES:

1. THE APPLICABLE CODES AND REGULATIONS FOR THIS PROJECT INCLUDE, BUT ARE NOT LIMITED TO, THE FOLLOWING:

   CALIFORNIA CODE OF REGULATIONS
   TITLE 8, INDUSTRIAL RELATIONS
   TITLE 19, PUBLIC SAFETY, STATE FIRE MARSHAL REGULATIONS
   TITLE 24, PART 1, ADMINISTRATIVE REGULATIONS
   2022 CALIFORNIA BUILDING CODE, PART 2, TITLE 24 CCR
   2022 CALIFORNIA ELECTRICAL CODE, PART 3, TITLE 24 CCR
   2022 CALIFORNIA MECHANICAL CODE, PART 4, TITLE 24 CCR
   2022 CALIFORNIA PLUMBING CODE, PART 5, TITLE 24 CCR
   2022 CALIFORNIA FIRE CODE, PART 9, TITLE 24 CCR

   NFPA 101 2021 EDITION
   OSHA - OCCUPATIONAL SAFETY AND HEALTH ACT

2. LAYOUT OF MATERIALS, EQUIPMENT AND SYSTEMS IS GENERALLY DIAGRAMMATIC UNLESS SPECIFICALLY DIMENSIONED. SOME WORK MAY BE SHOWN OFFSET FOR CLARITY. THE PLUMBING BUILDING PLANS HAVE BEEN PREPARED TO MATCH THE ARCHITECTURAL PLANS. IF DIFFERENCES OCCUR, THE ARCHITECTURAL PLANS ARE TO TAKE PRECEDENCE. THE ACTUAL LOCATIONS OF ALL MATERIALS, PIPING, DUCTWORK, FIXTURES, EQUIPMENT, SUPPORTS, ETC. SHALL BE CAREFULLY PLANNED, PRIOR TO INSTALLATION OF ANY WORK, TO AVOID ALL INTERFERENCE WITH EACH OTHER, OR WITH STRUCTURAL, ELECTRICAL, ARCHITECTURAL, OR OTHER ELEMENTS. ALL PIPE OFFSET ELBOWS FOR COORDINATION BETWEEN TRADES ARE NOT SHOWN. CONTRACTOR SHALL INCLUDE SUFFICIENT FUNDS FOR THE COORDINATION OFFSETS IN THE BID. VERIFY THE PROPER VOLTAGE AND PHASE OF ALL EQUIPMENT WITH THE ELECTRICAL PLANS. ALL CONFLICTS SHALL BE CALLED TO THE ATTENTION OF THE ARCHITECT AND THE ENGINEER PRIOR TO INSTALLATION OF ANY WORK OR THE ORDERING OF ANY EQUIPMENT.

3. PENETRATIONS OF PIPES, CONDUITS, ETC. IN WALLS OR FLOORS REQUIRING PROTECTED OPENINGS SHALL BE FIRE STOPPED.

4. ALL PIPING AND CONDUIT REQUIRING SEISMIC BRACE AND SUPPORT SHALL BE SUPPORTED PER MASON WEST, INC. "SEISMIC RESTRAINT COMPONENTS FOR SUSPENDED DISTRIBUTION SYSTEMS", 2020 EDITION, HCAI (OSHPD) PRE-APPROVED ANCHORAGE OPM-0043-13, OR OTHER HCAI (OSHPD) PRE-APPROVED SYSTEM.

5. WHEN INSTALLING DRILLED-IN ANCHORS AND/OR POWDER-DRIVEN PINS IN EXISTING NON-PRESTRESSED CONCRETE, USE CARE AND CAUTION TO AVOID CUTTING OR DAMAGING THE EXISTING REINFORCING BARS. WHEN INSTALLING THEM INTO EXISTING PRE-STRESSED CONCRETE (PRE- OR POST-TENSIONED), LOCATE THE PRESTRESSED TENDONS BY USING A NON-DESTRUCTIVE METHOD PRIOR TO INSTALLATION. MAINTAIN A MINIMUM CLEARANCE OF ONE INCH BETWEEN THE REINFORCEMENT AND THE DRILLED-IN ANCHOR AND/OR PIN.

6. FIELD VERIFY THE EXACT LOCATION, DEPTH AND SIZE OF ALL NEW POINTS OF CONNECTION TO EXISTING UTILITIES PRIOR TO COMMENCING NEW UTILITY WORK.

7. INSTALLATION OF NEW UTILITIES FROM EXISTING MAINS IN THE STREET SHALL BE DONE IN STRICT ACCORDANCE WITH GOVERNING AUTHORITY REQUIREMENTS.

8. INSTALLATION, TYPE AND MANUFACTURERS MODELS OF DOMESTIC WATER METERS, BACKFLOW PREVENTERS, FIRE HYDRANTS, DETECTOR CHECK VALVES, MANHOLES, DRAIN INLETS/OUTLETS AND OTHER APPURTENANCES OF SITE UTILITY SYSTEMS SHALL BE DONE IN STRICT ACCORDANCE WITH GOVERNING AUTHORITY REQUIREMENTS.

9. BACKFLOW PREVENTER SHALL BE INSTALLED AT THE MINIMUM HEIGHT ABOVE FINISH GRADE AS ALLOWED BY GOVERNING AUTHORITY.

10. CONTRACTOR SHALL EXCAVATE AND BACKFILL THE GAS SERVICE TRENCH FOR THE LOCAL GAS UTILITY. THE LOCAL GAS UTILITY SHALL INSTALL THEIR GAS SERVICE LINE TO THE GAS METER. TRENCHING SHALL BE IN ACCORDANCE WITH UTILITY STANDARDS. ALL CHARGES AND FEES INCURRED BY THE UTILITY FOR NEW GAS SERVICE SHALL BE PAID BY THE CONTRACTOR.

11. ALL DOMESTIC WATER PIPING SHALL BE A MINIMUM OF 1/2" SIZE UNLESS NOTED OTHERWISE. USE A REDUCING DROP ELL AT FIXTURE CONNECTION WHEN APPLICABLE.

PLUMBING DEMOLITION NOTES:

1. ALL PLUMBING SYSTEMS SHOWN ON THE PLUMBING DEMOLITION SHEET ARE EXISTING.

2. ALL EXISTING RISERS, DROPS, MAINS AND BRANCHES FOR EACH UTILITY TO REMAIN, UNLESS OTHERWISE NOTED.

3. ALL PLUMBING UTILITIES TO REMAIN IN SERVICE DURING DEMOLITION. COORDINATE ALL SHUT-DOWNS WITH MAINTENANCE STAFF TO MINIMIZE INTERRUPTION OF SERVICES.

4. ALL REMOVED PLUMBING FIXTURES ARE TO BE PROTECTED AND STORED FOR POSSIBLE FUTURE USE.

5. DISCONNECT, REMOVE, AND/OR CAP SOIL, WASTE, VENT, COLD WATER AND HOT WATER, CONDENSATE DRAIN, AND GAS PIPING BELOW FLOOR OR ABOVE CEILING AS INDICATED ON THE DRAWINGS.

6. REFER TO PLUMBING DRAWINGS SHOWING NEW WORK FOR POINTS OF CONNECTION.

7. REFER TO ARCHITECTURAL DEMOLITION PLANS FOR FURTHER DETAILS AND NOTES.

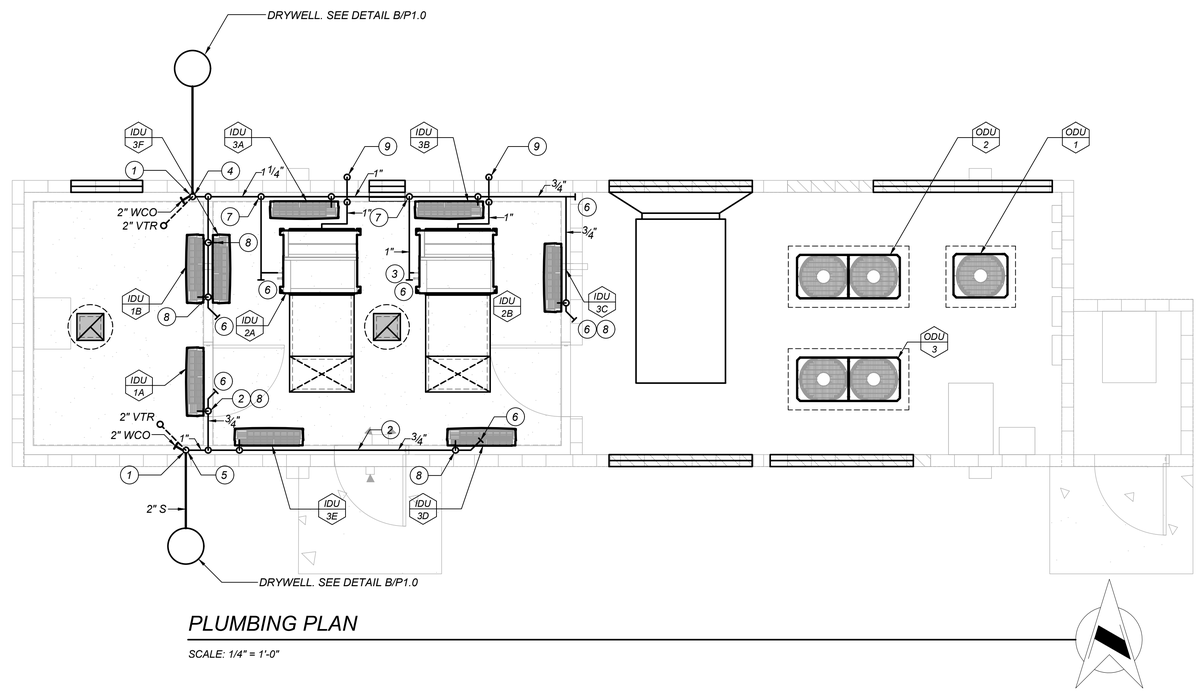


## PLUMBING PLAN

SCALE: 1/4" = 1'-0"

KEYNOTES: (THIS SHEET ONLY)

1. 2" VENT UP IN WALL AND VENT THRU ROOF 2" WASTE DOWN TO BELOW GRADE AND TERMINATE INTO DRYWELL.
2. ROUTE 3/4" CD ABOVE DOOR HEADER HIGH AS POSSIBLE.
3. 1" CONDENSATE DRAIN LINE FROM IDU 2A/2B CD PUMP CONNECTION AND GRAVITY DRAIN INTO CONDENSATE DRAIN MAINLINE. SEE DETAIL A/P1.0 (TYP. OF 2)
4. 1/4" CD P.O.C. TO 2" DRAIN LINE IN WALL.
5. 1" CD P.O.C. TO 2" DRAIN LINE IN WALL.
6. CD END LINE CLEANOUT. TERMINATE WITH FEMALE ADAPTOR AND PLUG. (TYP. OF 7)
7. 1" CD DOWN IN WALL FROM IDU 2A/2B AND CONNECT TO CONDENSATE DRAIN MAINLINE.
8. 3/4" CD FROM WALL MOUNTED UNITS DOWN IN WALL TO CONDENSATE DRAIN MAINLINE. (TYP. OF 8)
9. 1" PAN DRAIN LINE TO TERMINATE 6" A.F.F. FROM SECONDARY PAN DRAIN. (TYP. OF 2)

NOTES:

1. ALL CONDENSATE DRAIN LINES TO BE INSULATED TO PREVENT CONDENSATION ON EXTERIOR OF PIPE.

2. ALL CONDENSATE DRAIN LINES TO SLOPE 1% MINIMUM.

| | PLUMBING LEGEND | |
|---|---|---|
| SYMBOL | ITEM | ABBR |
| | SOIL or WASTE | S or W |
| | VENT | V |
| | VENT RISER | VR |
| | VENT THRU ROOF | VTR |
| | DOMESTIC COLD WATER | CW |
| | DOMESTIC HOT WATER | HW |
| | DOMESTIC HOT WATER RETURN | HWR |
| —G— | LOW PRESSURE NATURAL GAS | G |
| —5#G— | 5 PSI GAS | 5#G |
| —GSM— | GAS SERVICE MAIN BY THE LOCAL GAS UTILITY | GSM |
| —C— | CONDENSATE DRAIN | CD |
| —RWL— | RAIN WATER LEADER | RWL |
| —OD— | OVERFLOW DRAIN | OD |
| —SD— | STORM DRAIN | SD |
| —IW— | INDIRECT WASTE | IW |
| —F— | FIRE PROTECTION LINE | F |
| | EXISTING PIPING | (E) |
| (E) | EXISTING | |
| (N) | NEW | |
| | ABOVE CEILING | ABV CLG |
| | BELOW FLOOR | BEL FLR |
| | BELOW GRADE | BEL GR |
| | TYPICAL | TYP |
| | CONTINUATION | CONT |
| | DOWN | DN |
| | FLOOR CLEANOUT | FCO |
| | CLEANOUT TO GRADE | COTG |
| | WALL CLEANOUT | WCO |
| | PIPING TURN UP | |
| | PIPING TURN DOWN | |
| | POINT OF CONNECTION | P.O.C |
| | SHUT-OFF VALVE IN BOX | SOV |
| | SHUT-OFF VALVE | SOV |
| | SHUT-OFF VALVE IN RISER | - |
| | SHUT-OFF VALVE IN DROP | - |
| | GATE VALVE | - |
| | BUTTERFLY VALVE | - |
| | GLOBE VALVE | - |
| | CHECK VALVE | - |
| | PLUG VALVE | - |
| | BALL VALVE | - |
| | BALANCE COCK | - |
| | REDUCER | - |
| | MANHOLE | MH |
| | FLOW LINE | FL |
| | UNION | - |
| | RELIEF VALVE | - |
| | BALANCING VALVE | - |
| | PRESSURE GAUGE | - |
| | THERMOMETER | - |

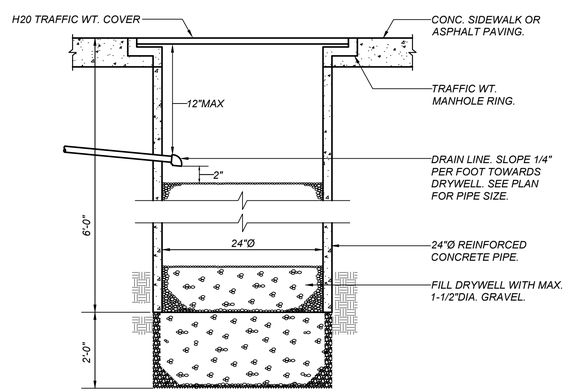


## DRYWELL DETAIL

B / P1.0

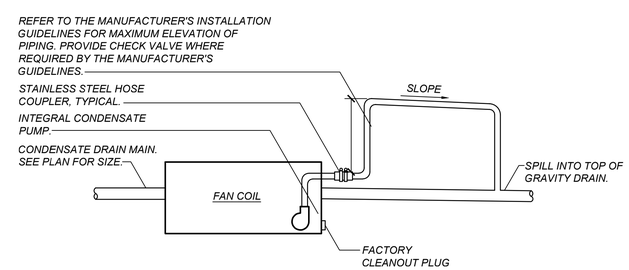


## IDU CONDENSATE DRAIN CONNECTION DETAIL

A / P1.0

REGISTERED PROFESSIONAL ENGINEER
MICHAEL D. CANTELLI
No. M23885
Exp. 9-30-25
MECHANICAL
STATE OF CALIFORNIA

FOR PLAN CHECK ONLY


LAWRENCE ENGINEERING GROUP
4910 E. Clinton Way, Suite 101 Fresno, CA 93727
(559) 431-0101 23069 FAX (559) 431-1362


| | DATE | RECORD DRAWING | DATE |
|---|---|---|---|
| DESIGNED: | | RESIDENT ENGINEER | |
| DRAWN: | | | |
| CHECKED: | | | |

FOR RIGHT OF WAY DATA AND ACCURATE ACCESS DETERMINATION, SEE DOCUMENTS IN THE DEPARTMENT OF PUBLIC WORKS AND PLANNING.

SCALE: HORIZ 0 10' 20' — VERT 0 1' 2'

PLUMBING PLAN

PROJECT: DEPARTMENT OF INTERNAL SERVICES — REEDLEY RADIO TOWER EQUIPMENT SHELTER

THE COUNTY OF FRESNO

DEPARTMENT OF PUBLIC WORKS AND PLANNING

| DRAWING NO. | SHEET NO. | TOTAL |
|---|---|---|
| P1.0 | 1 | 1 |

GENERAL MECHANICAL NOTES:

1. THE INTENT OF THE DRAWING AND SPECIFICATIONS IS TO CONSTRUCT THE BUILDING IN ACCORDANCE WITH THE 2022 EDITION OF TITLE 24, CALIFORNIA CODE OF REGULATIONS. CHANGES TO THE STRUCTURAL, ACCESSIBILITY OR FIRE AND LIFE-SAFETY PORTIONS OF THE APPROVED PLANS AND SPECIFICATIONS SHALL BE MADE BY AN ADDENDUM OR CONSTRUCTION CHANGE DOCUMENT AS REQUIRED IN SECTION 4-338, PART 1, TITLE 24, CCR, AND SHALL BE SUBMITTED TO AND APPROVED BY AHJ PRIOR TO COMMENCEMENT OF THE WORK.

2. LAYOUT OF MATERIALS, EQUIPMENT AND SYSTEMS IS GENERALLY DIAGRAMMATIC UNLESS SPECIFICALLY DIMENSIONED. SOME WORK MAY BE SHOWN OFFSET FOR CLARITY. THE HVAC BUILDING PLANS HAVE BEEN PREPARED TO MATCH THE ARCHITECTURAL PLANS. IF DIFFERENCES OCCUR, THE ARCHITECTURAL PLANS ARE TO TAKE PRECEDENCE. THE ACTUAL LOCATIONS OF ALL MATERIALS, PIPING, DUCTWORK, FIXTURES, EQUIPMENT, SUPPORTS, ETC. SHALL BE CAREFULLY PLANNED, PRIOR TO INSTALLATION OF ANY WORK TO AVOID ALL INTERFERENCES WITH EACH OTHER, OR WITH STRUCTURAL, ELECTRICAL, ARCHITECTURAL, OR OTHER ELEMENTS. ALL DUCT AND PIPE OFFSET ELBOWS FOR COORDINATION BETWEEN TRADES ARE NOT SHOWN. CONTRACTOR SHALL INCLUDE SUFFICIENT FUNDS FOR THE COORDINATION OFFSETS IN THE BID. VERIFY THE PROPER VOLTAGE AND PHASE OF ALL EQUIPMENT WITH THE ELECTRICAL PLANS. ALL CONFLICTS SHALL BE CALLED TO THE ATTENTION OF THE ARCHITECT AND THE ENGINEER PRIOR TO THE INSTALLATION OF ANY WORK OR THE ORDERING OF ANY EQUIPMENT.

3. ALL PIPING, DUCTWORK AND CONDUIT REQUIRING SEISMIC BRACE AND SUPPORT SHALL BE SUPPORTED PER MASON INDUSTRIES, INC. "SEISMIC RESTRAINT COMPONENTS FOR SUSPENDED UTILITIES", HCAI (OSHPD) PREAPPROVED ANCHORAGE OPM-0043-13 OR OTHER HCAI (OSHPD) PREAPPROVED SYSTEM.

4. WHEN INSTALLING DRILLED-IN ANCHORS AND/OR POWDER-DRIVEN PINS IN EXISTING NON-PRESTRESSED CONCRETE, USE CARE AND CAUTION TO AVOID CUTTING OR DAMAGING THE EXISTING REINFORCING BARS. WHEN INSTALLING THEM INTO EXISTING PRESTRESSED CONCRETE (PRE-OR POST-TENSIONED), LOCATE THE PRESTRESSED TENDONS BY USING A NON-DESTRUCTIVE METHOD PRIOR TO INSTALLATION. EXERCISE EXTREME CARE AND CAUTION TO AVOID CUTTING OR DAMAGING THE TENDONS DURING INSTALLATION. MAINTAIN A MINIMUM CLEARANCE OF ONE INCH BETWEEN THE REINFORCEMENT AND THE DRILLED-IN ANCHOR AND/OR PIN.

5. ALL MECHANICAL, PLUMBING, AND ELECTRICAL COMPONENTS SHALL BE ANCHORED AND INSTALLED PER THE DETAILS ON THE APPROVED CONSTRUCTION DOCUMENTS. WHERE THERE NO DETAIL IS INDICATED, THE FOLLOWING COMPONENTS SHALL BE ANCHORED OR BRACED TO MEET THE FORCE AND DISPLACEMENT REQUIREMENTS PRESCRIBED IN THE 2022 CBC, SECTIONS 1617A.1.18 THROUGH 1617A.1.26 AND ASCE 7-16 CHAPTERS 13, 26 AND 30..
   A. ALL PERMANENT EQUIPMENT AND COMPONENTS..
   B. TEMPORARY OR MOVABLE.EQUIPMENT THAT IS PERMANENTLY ATTACHED (E.G. HARD WIRED) TO THE BUILDING UTILITY SERVICES SUCH AS ELECTRICAL, GAS, OR WATER.
   C. MOVABLE EQUIPMENT WHICH IS STATIONED IN ONE PLACE FORM MORE THAN 8 HOURS AND HEAVIER THAN 400 LBS ARE REQUIRED TO BE ANCHORED WITH TEMPORARY ATTACHMENTS.

6. DUCTWORK SIZES SHOWN ARE INSIDE CLEAR DIMENSIONS. WHERE ACOUSTIC LINING IS SHOWN, INCREASE EACH SHEET METAL DIMENSION TO ACCOMMODATE LINING & MAINTAIN CLEAR INSIDE DUCT DIMENSIONS SHOWN.

7. FOR REFRIGERANT PIPING AND WIRING REQUIREMENTS REFER TO SHEET M3.1.

KEYNOTES: (THIS SHEET ONLY)

(1) PROVIDE FULL SIZE S/M SLEEVE BETWEEN LOUVER AND WALL GRILLE.

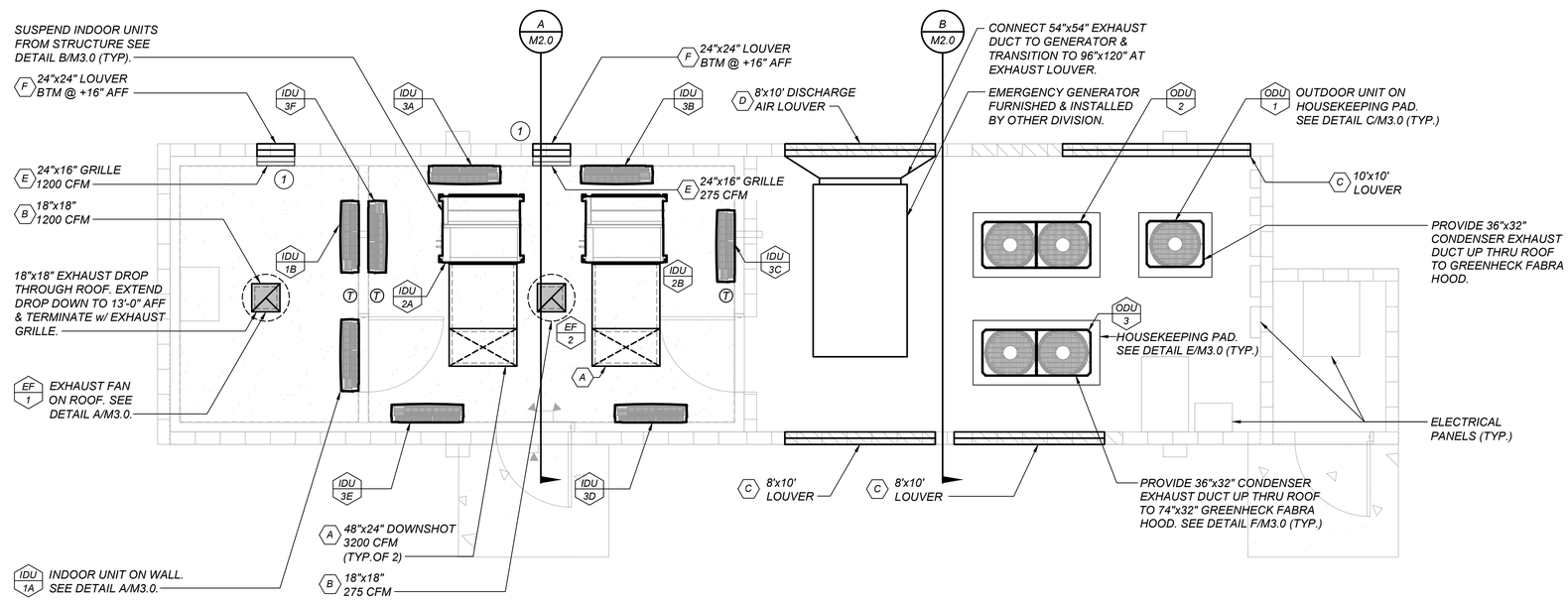


## MECHANICAL PLAN

SCALE: 1/4" = 1'-0"

AIR CONDITIONING LEGEND

| SYMBOL | ITEM | ABBR |
|---|---|---|
| | ROUND DUCT | Ø |
| | FLAT OVAL DUCT | |
| | SHEET METAL DUCT | — |
| | ACOUSTIC LINING FOR DUCT OR GRILLES | (L) |
| | DUCT W/EXT INSULATION & GALV. SM SUNSHIELD | — |
| | SUPPLY AIR DUCT DROP | — |
| | RETURN AIR DUCT DROP | — |
| | EXHAUST DUCT AIR DROP | — |
| | SUPPLY AIR DUCT RISE | — |
| | RETURN AIR DUCT RISE | — |
| | EXHAUST AIR DUCT RISE | — |
| | TURNING VANES | TV |
| | EXTRACTOR | — |
| | VOLUME CONTROL DAMPER W/LOCKING QUADRANT | VCD |
| | OPPOSED BLADE DAMPER | OBD |
| | BACKDRAFT DAMPER | BDD |
| | VOLUME CONTROL DAMPER W/ REMOTE REGULATOR | VCR |
| & | FIRE/SMOKE DAMPER WITH ACCESS PANEL | F/SD |
| & | FIRE DAMPER WITH ACCESS PANEL | FD |
| & | SMOKE DAMPER WITH ACCESS PANEL | SD |
| CFM | CUBIC FEET OF AIR PER MINUTE | CFM |
| T | THERMOSTAT @ +4'-0" TOP OF BOX | T'STAT |
| T | EMS TEMPERATURE SENSOR @ +4'-0" TOP OF BOX | — |
| | DIRECTION OF FLOW | — |
| | SUPPLY AIR | SA |
| | RETURN AIR | RA |
| | EXHAUST AIR | EA |
| | OUTSIDE AIR | OSA |
| | PIPE/DUCT TURN DOWN | — |
| | PIPE/DUCT TURN UP | — |
| | POINT OF CONNECTION | POC |
| | EXISTING (DESIGNATED) | (E) |
| | NEW (DESIGNATED) | (N) |
| SD | DUCT SMOKE DETECTOR | SD |
| A/V | AUDIBLE/VISUAL ALARM | A/VA |
| | BYPASS TIMER | BPT |

REGISTERED PROFESSIONAL ENGINEER MICHAEL D. CANADA No. M23569 Exp. 9-30-25 MECHANICAL STATE OF CALIFORNIA

LAWRENCE ENGINEERING GROUP
4910 E. Clinton Way, Suite 101 (559) 431-0101 23069 Fresno, CA 93727 FAX (559) 431-1362

| | DATE | RECORD DRAWING | DATE |
|---|---|---|---|
| DESIGNED: | | RESIDENT ENGINEER | |
| DRAWN: | | | |
| CHECKED: | | | |

FOR RIGHT OF WAY DATA AND ACCURATE ACCESS DETERMINATION, SEE DOCUMENTS IN THE DEPARTMENT OF PUBLIC WORKS AND PLANNING.

SCALE
HORIZ 0 10' 20'
VERT 0 1' 2'

MECHANICAL PLAN

PROJECT
DEPARTMENT OF INTERNAL SERVICES
REEDLEY RADIO TOWER EQUIPMENT SHELTER

THE COUNTY OF FRESNO

DEPARTMENT OF PUBLIC WORKS AND PLANNING

| M1.0 | 1 | 8 |
|---|---|---|
| DRAWING NO. | SHEET NO. | TOTAL |

June 2024 4:43 PM p:\2023\23069 fresno county reedley tower hvac\4-drawings\4 MK\M1.0 MECHANICAL PLAN.dwg mathew

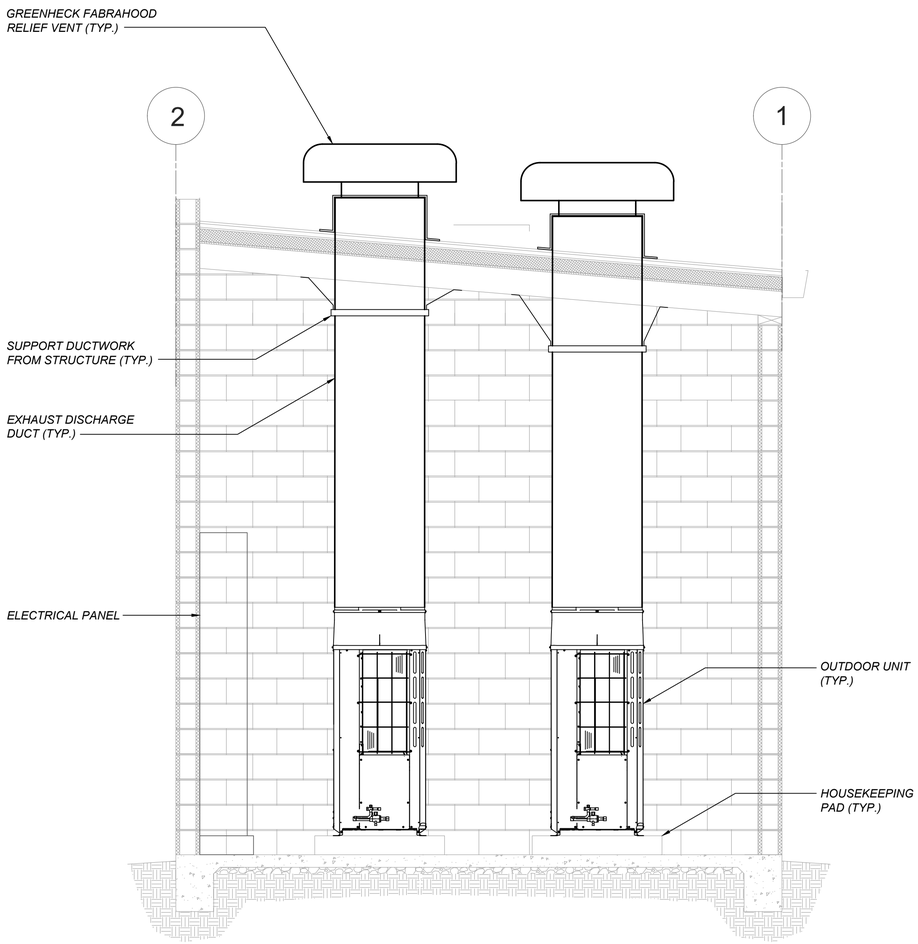


## SECTION AT EQUIPMENT YARD

SCALE: 1/2"=1'-0"

B / M2.0

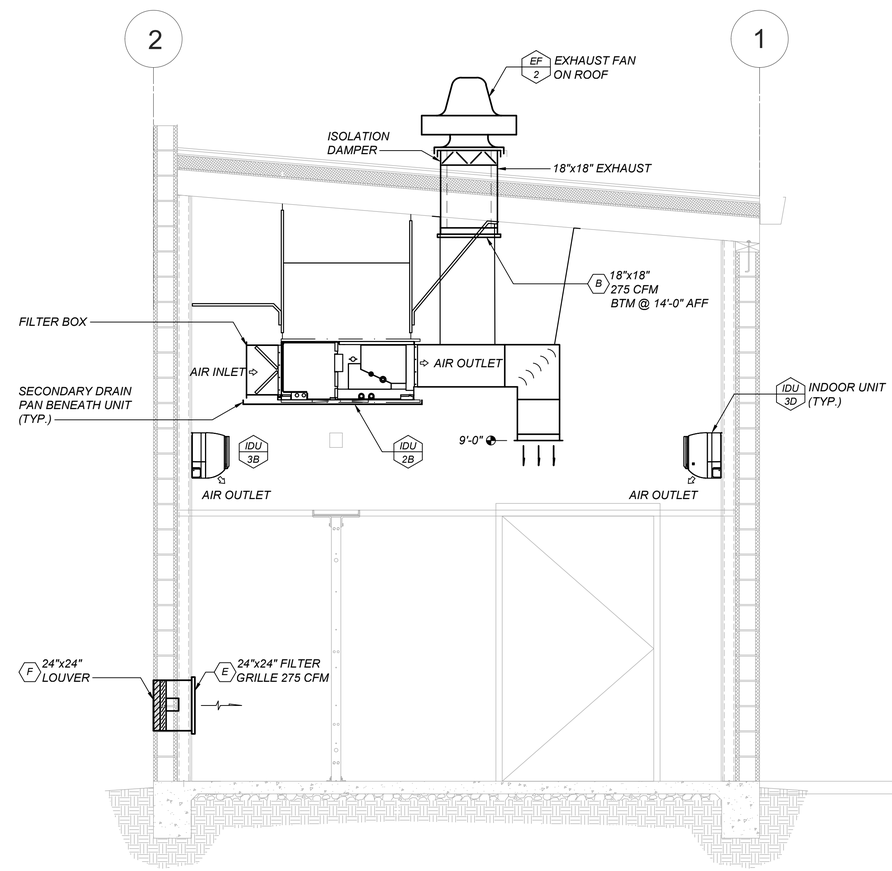


## SECTION AT RADIO EQUIPMENT ROOM

SCALE: 1/2"=1'-0"

A / M2.0

REGISTERED PROFESSIONAL ENGINEER
MICHAEL D. CANTRELL
No. M25568
Exp. 9-30-25
MECHANICAL
STATE OF CALIFORNIA

LAWRENCE ENGINEERING GROUP
4910 E. Clinton Way, Suite 101
(559) 431-0101
23069
Fresno, CA 93727
FAX (559) 431-1362

| | DATE | RECORD DRAWING | DATE |
|---|---|---|---|
| DESIGNED: | | RESIDENT ENGINEER | |
| DRAWN: | | | |
| CHECKED: | | | |

FOR RIGHT OF WAY DATA AND ACCURATE ACCESS DETERMINATION, SEE DOCUMENTS IN THE DEPARTMENT OF PUBLIC WORKS AND PLANNING.

SCALE
HORIZ 0 10' 20'
VERT 0 1' 2'

MECHANICAL SECTION VIEWS

PROJECT
DEPARTMENT OF INTERNAL SERVICES
REEDLEY RADIO TOWER EQUIPMENT SHELTER

THE COUNTY OF FRESNO

DEPARTMENT OF PUBLIC WORKS AND PLANNING

| M2.0 | 2 | 8 |
|---|---|---|
| DRAWING NO. | SHEET NO. | TOTAL |

June 2024 4:43 PM p:\2023\23069 fresno county reedley tower hvac\4-drawings\4 MK\M2.0 MECHANICAL SECTION VIEWS.dwg mathew

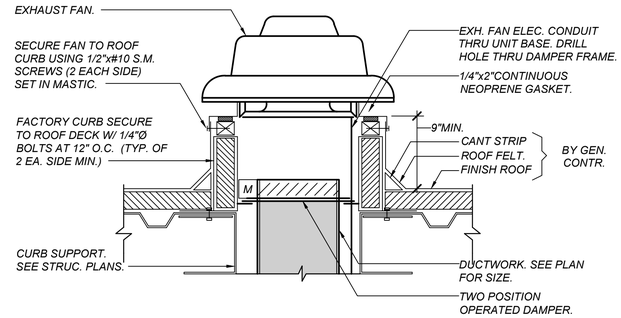


## ROOF EXHAUST FAN MOUNTING DETAIL

SCALE: NONE

MM134

D / M3.0

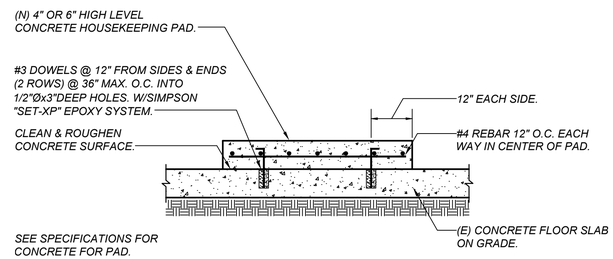


## HOUSEKEEPING PAD DETAIL

SCALE: NONE

MM066

E / M3.0

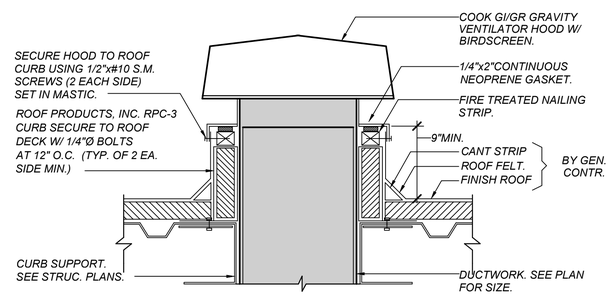


## ROOF HOOD MOUNTING DETAIL

SCALE: NONE

MM137

F / M3.0

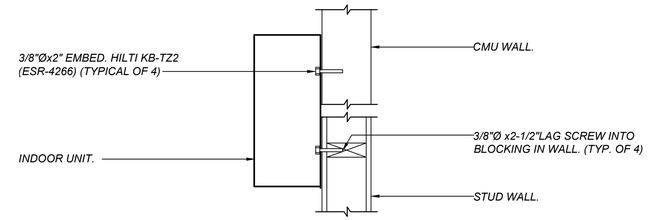


## INDOOR UNIT MOUNTING DETAIL

SCALE: NONE

MM055

A / M3.0

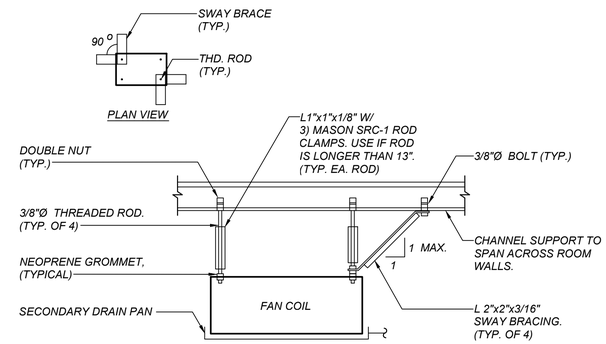


## FAN COIL MOUNTING DETAIL

SCALE: NONE

MM116

B / M3.0

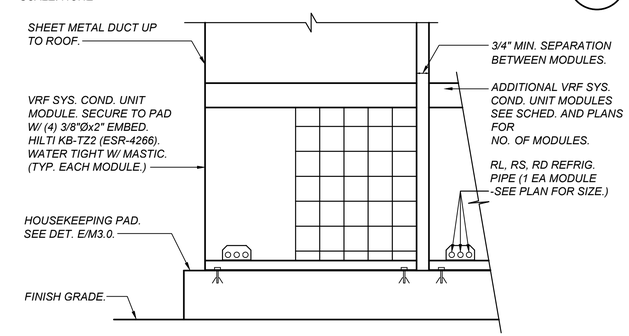


## CONDENSING UNIT MOUNTING DETAIL

SCALE: NONE

MM170

C / M3.0

REGISTERED PROFESSIONAL ENGINEER
MICHAEL D. CANTRELL
No. M25568
Exp. 9-30-25
MECHANICAL
STATE OF CALIFORNIA

LAWRENCE ENGINEERING GROUP
4910 E. Clinton Way, Suite 101
(559) 431-0101
23069
Fresno, CA 93727
FAX (559) 431-1362

| | DATE | RECORD DRAWING | |
|---|---|---|---|
| DESIGNED: | | RESIDENT ENGINEER | DATE |
| DRAWN: | | | |
| CHECKED: | | | |

FOR RIGHT OF WAY DATA AND ACCURATE ACCESS DETERMINATION, SEE DOCUMENTS IN THE DEPARTMENT OF PUBLIC WORKS AND PLANNING.

SCALE
HORIZ 0 10' 20'
VERT 0 1' 2'

MECHANICAL DETAILS

PROJECT
DEPARTMENT OF INTERNAL SERVICES
REEDLEY RADIO TOWER EQUIPMENT SHELTER

THE COUNTY OF FRESNO

DEPARTMENT OF PUBLIC WORKS AND PLANNING

| M3.0 | 3 | 8 |
|---|---|---|
| DRAWING NO. | SHEET NO. | TOTAL |

June 2024 4:44 PM p:\2023\23069 fresno county reedley tower hvac\4-drawings\4 M\M3.0 MECHANICAL DETAILS.dwg mathew

| DIAGRAM SYMBOL LEGEND | |
|---|---|
| DISPLAY | DESCRIPTION |
| —///— | POWER WIRE |
| ———— | CONTROL WIRE |
| — — — | REF. PIPE |

| CONT.No | 23069 | PAGE | |
|---|---|---|---|

CITY MULTI

# SYSTEM SCHEMATIC DWG.

This drawing is schematic in nature. Final routing of piping & wiring shall be determined by the installing contractor and/or designer of record

Additional refrigerant charge is needed depending on the size and length of extended piping. Please refer the amount of pre-charge and the formula of calculation which is mentioned on the data book.

1.25mm²(16 AWG) : 1.25mm²(16 AWG) or more. 0.75mm²(20 AWG) : between 0.5mm²(24 AWG) and 0.75mm²(20 AWG).

Coded Notes:
NOTE 1: CMY-Y202S-G2 or CMY-Y302S-G2 gas joints should be installed within 15 degrees of horizontal or vertical. When vertical the tee joint should not face downward - reference installation manual for additional details

| PIPING AND CONTROLS | |
|---|---|
| SYMBOL | BRANCH PIPE MODEL NAME |
| J1 | CMY-Y102LS-G2 |
| J2 | CMY-Y202S-G2 |
| J3 | CMY-Y102SS-G2 |
| SYMBOL | LIQUID PIPE/GAS PIPE SIZE |
| P1 | 3/8 / 7/8 |
| P2 | 3/8 / 5/8 |
| P3 | 5/8 / 1-1/8 |
| P4 | 1/2 / 1-1/8 |
| P5 | 3/8 / 3/4 |
| SYMBOL | MODEL NUMBER |
| CR | TAC-Y53CRAU-J |

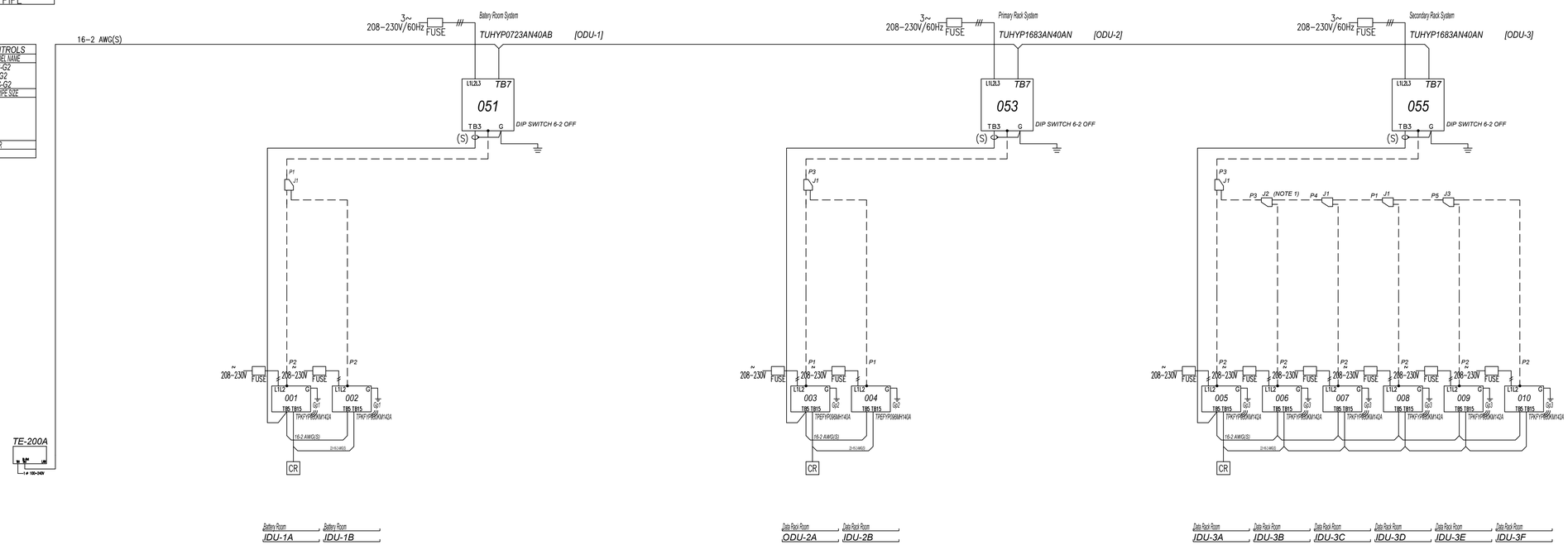


| Diamond System Builder |
|---|
| sw: 4.5.4.7<br>db: 4.5.2.8 |
| 6/19/2023<br>4:43 PM |

REMARKS
Originator: Michael Cantelmi
Comments:

REGISTERED PROFESSIONAL ENGINEER
MICHAEL D. CANTELMI
No. M25608
Exp. 9-30-25
MECHANICAL
STATE OF CALIFORNIA


LAWRENCE ENGINEERING GROUP
4910 E. Clinton Way, Suite 101
(559) 431-0101
23069
Fresno, CA 93727
FAX (559) 431-1362


| | DATE | RECORD DRAWING | DATE |
|---|---|---|---|
| DESIGNED: | | RESIDENT ENGINEER | |
| DRAWN: | | | |
| CHECKED: | | | |

FOR RIGHT OF WAY DATA AND ACCURATE ACCESS DETERMINATION, SEE DOCUMENTS IN THE DEPARTMENT OF PUBLIC WORKS AND PLANNING.

SCALE
HORIZ 0 10' 20'
VERT 0 1' 2'

PIPING & WIRING DIAGRAM

PROJECT
DEPARTMENT OF INTERNAL SERVICES
REEDLEY RADIO TOWER EQUIPMENT SHELTER

THE COUNTY OF FRESNO

DEPARTMENT OF PUBLIC WORKS AND PLANNING

| M3.1 | 4 | 8 |
|---|---|---|
| DRAWING NO. | SHEET NO. | TOTAL |

June 2024 4:44 PM p:\2023\23069 fresno county reedley tower hvac\4-drawings\# MA\M3.1 FLOW DIAGRAM.dwg mathew

## GRILLE SCHEDULE

| MARK | DUTY | DESCRIPTION |
|---|---|---|
| A | CEILING RETURN OR EXHAUST | TITUS CORE 50F (TYPE 3) ALUMINUM EGG CRATE REGISTER WITH 1/2" x 1/2" GRID, FOR LAY-IN CEILING, AND NO. 26 OFF-WHITE FINISH. |
| B | CEILING RETURN OR EXHAUST | TITUS CORE 50F (TYPE 3) ALUMINUM EGG CRATE REGISTER WITH 1/2" x 1/2" GRID, FOR LAY-IN CEILING, AND NO. 26 OFF-WHITE FINISH. |
| C | LOUVER | RUSKIN ELF 375 STATIONARY EXTRUDED ALUMINUM LOUVER. 3/4" MESH SCREEN ON INSIDE FACE. MILL FINISH FOR PAINTING. |
| D | COMBINATION LOUVER | RUSKIN ELBD 375 COMBINATION STATIONARY LOUVER WITH BACKDRAFT DAMPER. EXTRUDED ALUMINUM CONSTRUCTION. REMOVABLE 1/2" MESH SCREEN ON INSIDE FACE. MILL FINISH FOR PAINTING. DESIGNED FOR EXHAUST. |
| E | WALL GRILLE | TITUS CORE 33RF HEAVY DUTY GRILLE, AND NO. 26 OFF-WHITE FINISH. PROVIDE WITH 2" FILTER RACK WITH MERV 8 PLEATED MEDIA FILTER. |
| F | COMBINATION LOUVER | RUSKIN ELC445 COMBINATION STATIONARY LOUVER WITH OPERABLE DAMPER. 4" EXTRUDED ALUMINUM CONSTRUCTION. REMOVABLE 1/2" MESH SCREEN ON INSIDE FACE. MILL FINISH FOR PAINTING. PROVIDE WITH BLADE AND JAMB SEALS AND ELECTRIC ACTUATOR. |

## INDOOR UNIT SCHEDULE

| | DESIGNATION | IDU 1A | IDU 1B | IDU 2A | IDU 2B | IDU 3A | IDU 3B | IDU 3C | IDU 3D | IDU 3E | IDU 3F |
|---|---|---|---|---|---|---|---|---|---|---|---|
| BLOWER | SUPPLY AIR (CFM) | 920 | 920 | 2,507 | 2,507 | 920 | 920 | 920 | 920 | 920 | 920 |
| | EXT. S P (IN. WC) | HIGH | HIGH | MID | MID | HIGH | HIGH | HIGH | HIGH | HIGH | HIGH |
| | MIN. O.S.A. (CFM) | - | - | - | - | - | - | - | - | - | - |
| | MOCP | 15 | 15 | 15 | 15 | 15 | 15 | 15 | 15 | 15 | 15 |
| | MCA / FLA (AMPS) | .63 / - | .63 / - | 8.2 / - | 8.2 / - | .63 / - | .63 / - | .63 / - | .63 / - | .63 / - | .63 / - |
| | VOLTS/PHASE | 208 / 1 | 208 / 1 | 208 / 1 | 208 / 1 | 208 / 1 | 208 / 1 | 208 / 1 | 208 / 1 | 208 / 1 | 208 / 1 |
| COOLING | SENSIBLE (MBH) | 24.6 | 24.6 | 96.0 | 96.0 | 22.2 | 22.2 | 22.2 | 22.2 | 22.2 | 22.2 |
| | TOTAL (MBH) | 26.4 | 26.4 | 96.0 | 96.0 | 30.0 | 30.0 | 30.0 | 30.0 | 30.0 | 30.0 |
| | EADB/EAWB (°F) | 75 / 62 | 75 / 62 | 75 / 62 | 75 / 62 | 75 / 62 | 75 / 62 | 75 / 62 | 75 / 62 | 75 / 62 | 75 / 62 |
| | REFRIGERANT | R410A | R410A | R410A | R410A | R410A | R410A | R410A | R410A | R410A | R410A |
| HEATING | CAPACITY (MBH) @47°F | 22.7 | 22.7 | 108.0 | 108.0 | 22.7 | 22.7 | 22.7 | 22.7 | 22.7 | 22.7 |
| | KW | - | - | - | - | - | - | - | - | - | - |
| | STAGES | - | - | - | - | - | - | - | - | - | - |
| FILTER | QUANTITY/SIZE | FACTORY | FACTORY | FACTORY | FACTORY | FACTORY | FACTORY | FACTORY | FACTORY | FACTORY | FACTORY |
| | TYPE | POLYPROPYLENE | POLYPROPYLENE | MERV 8 | MERV 8 | POLYPROPYLENE | POLYPROPYLENE | POLYPROPYLENE | POLYPROPYLENE | POLYPROPYLENE | POLYPROPYLENE |
| | P D (IN. WC) | - | - | 0.30 | 0.30 | - | - | - | - | - | - |
| MANUFACTURER | | TRANE | TRANE | TRANE | TRANE | TRANE | TRANE | TRANE | TRANE | TRANE | TRANE |
| TYPE | | WALL MTD. | WALL MTD. | SUSPENDED | SUSPENDED | WALL MTD. | WALL MTD. | WALL MTD. | WALL MTD. | WALL MTD. | WALL MTD. |
| MODEL NUMBER | | TPKFYP030KM142A | TPKFYP030KM142A | TPEFYP096MH | TPEFYP096MH | TPKFYP030KM142A | TPKFYP030KM142A | TPKFYP030KM142A | TPKFYP030KM142A | TPKFYP030KM142A | TPKFYP030KM142A |
| CONDENSING UNIT | | ODU-1 | ODU-1 | ODU-2 | ODU-2 | ODU-3 | ODU-3 | ODU-3 | ODU-3 | ODU-3 | ODU-3 |
| LOCATION | | BATTERY ROOM | BATTERY ROOM | RADIO IT ROOM | RADIO IT ROOM | RADIO IT ROOM | RADIO IT ROOM | RADIO IT ROOM | RADIO IT ROOM | RADIO IT ROOM | RADIO IT ROOM |
| OPER. WT (LBS) | | 50 | 50 | 250 | 250 | 50 | 50 | 50 | 50 | 50 | 50 |
| ACCESSORIES | | 1 | 1 | 1, 2 | 1, 2 | 1 | 1 | 1 | 1 | 1 | 1 |

1 . PROVIDE WITH CONDENSATE LIFT PUMP AND HARD WIRED CONTROLLER.
2 PROVIDE WITH FACTORY FILTER CABINET

## TITLE 24 ACCEPTANCE TESTING TABLE

| | DESIGNATION | IDU 1A - IDU 1B | IDU 2A - IDU 2B | IDU 3A - IDU 3F |
|---|---|---|---|---|
| FORM / TITLE | NRCA-MCH-02-A OUTDOOR AIR. | | | |
| | NRCA-MCH-03-A CONSTANT VOLUME SINGLE ZONE HVAC. | X | X | X |
| | NRCA-MCH-04-A AIR DISTRIBUTION DUCT LEAKAGE. | | | |
| | NRCA-MCH-05-A AIR ECONOMIZER CONTROLS. | | | |
| | NRCA-MCH-06-A DEMAND CONTROL VENTILATION SYSTEMS. | | | |
| | NRCA-MCH-07-A SUPPLY FAN VARIABLE FLOW CONTROLS. | | | |
| | NRCA-MCH-08-A VALVE LEAKAGE TEST. | | | |
| | NRCA-MCH-09-A SUPPLY WATER TEMPERATURE RESET CONTROLS. | | | |
| | NRCA-MCH-10-A HYDRONIC SYSTEM VARIABLE FLOW CONTROLS. | | | |
| | NRCA-MCH-11-A AUTOMATIC DEMAND SHED CONTROLS. | | | |
| | NRCA-MCH-12-A FDD FOR PACKAGED DIRECT EXPANSION UNITS. | | | |
| | NRCA-MCH-13-A AUTOMATIC FDD FOR AIR HANDLING UNITS AND ZONE TERMINAL UNITS. | | | |
| | NRCA-MCH-14-A DISTRIBUTED ENERGY STORAGE DX AC SYSTEMS. | | | |
| | NRCA-MCH-15-A THERMAL ENERGY STORAGE (TES) SYSTEM. | | | |
| | NRCA-MCH-16-A SUPPLY AIR TEMPERATURE RESET CONTROLS. | | | |
| | NRCA-MCH-17-A CONDENSER WATER TEMPERATURE RESET CONTROLS. | | | |
| | NRCA-MCH-18-A ENERGY MANAGEMENT CONTROL SYSTEMS. | | | |
| | NRCA-MCH-19-A OCCUPANCY SENSOR CONTROLS. | | | |
| | NRCA-MCH-20 MULTI-FAMILY VENTILATION. | | | |
| | NRCA-MCH-21 MULTI-FAMILY ENVENLOPE LEAKAGE. | | | |
| | NRCA-MCH-22-A MF DUCT LEAKAGE. | | | |
| | NRCA-MCH-23-A MF HRV/ERV VERIFICATION. | | | |

NOTES:
1. REFER TO TITLE-24 DOCUMENTS FOR ADDITIONAL INFORMATION.
2. NRCA MUST BE SUMBITTED AND COMPLETED BY A CERTIFED ACCEPTANCT TEST TECHNICIAN TO COMPLY WITH CALIFORNIA ENERGY CODE.
3. SUBMIT ACCEPTANCE FORMS TO PROJECT INSPECTOR & MEOR FOR REVIEW.

## EXHAUST FAN SCHEDULE

| DESIGNATION | EF 1 | EF 2 |
|---|---|---|
| CFM | 1200 | 275 |
| EXT. S.P. (IN. WC) | 0.4 | 0.4 |
| HP / BHP | 1/2 / 0.17 | 1/4 / 0.17 |
| VOLTS / PHASE | 115 / 1 | 115 / 1 |
| MCA / MOP (AMPS) | 8 / 15 | 4 / 15 |
| FLA (AMPS) | 6.4 | 2.9 |
| RPM | 902 | 1018 |
| TIP SPEED/ SONES | 3455 / 6.7 | 2982 / 4.6 |
| DRIVE | DIRECT | DIRECT |
| MOUNTING | ROOF | ROOF |
| MANUFACTURER | GREENHECK | GREENHECK |
| TYPE | CENTRIFUGAL | CENTRIFUGAL |
| MODEL NUMBER | G-140-VG | G-098-VG |
| CONTROL | T'STAT / $H_2$ SENSOR | CONTINIOUS |
| LOCATION | BATTERY ROOM | RADIO IT ROOM |
| OPER. WT. (LBS) | 80 | 80 |
| ACCESSORIES | 1 | 2 |

1 . PROVIDE WITH EC MOTOR AND VARIGREEN CONTROLLER FOR TEMP. HUMIDITY CONTROL. PROVIDE ALL COMPONENTS NECESSARY TO OPERATE THE FAN BASED ON ROOM TEMPERATURE. PROVIDE WITH BACKDRAFT DAMPER, ROOF CURB, BIRD SCREEN AND NEMA 1 TOGGLE SWITCH AND JUNCTION BOX, AND ELECTRIC TWO POSITION ISOLATION DAMPER WITH BLADE AND JAMB SEALS.
2. PROVIDE WITH BACKDRAFT DAMPER, ROOF CURB, BIRD SCREEN, DIAL ON MOTOR SPEED CONTROLLER AND NEMA 1 TOGGLE SWITCH WITH JUNCTION BOX AND TWO POSITION ELECTRIC DAMPER WITH BLADE AND JAMB SEALS.

## OUTDOOR UNIT SCHEDULE

| DESIGNATION | ODU 1 | ODU 2 | ODU 3 |
|---|---|---|---|
| COOLING CAPACITY (MBH) | 72 | 168 | 168 |
| HEATING CAPACITY (MBH) | 80 | 188 | 188 |
| NOMINAL TONS | 6 | 14 | 14 |
| VOLTS/PHASE | 208/3 | 208/3 | 208/3 |
| FLA | - | - | - |
| MCA / MOCP | 24 / 40 | 59/ 90 | 59/ 90 |
| IEER / EER (AT ARI) | 24.15 / 12.5 | 26.6/11.45 | 26.6/11.45 |
| AMBIENT (°F) | 105 | 105 | 105 |
| REFRIG. LINE SIZE | | | |
| LIQUID (IN.OD) | 3/8 | 5/8 | 5/8 |
| SUCTION (IN. OD) | 7/8 | 1 1/8 | 1 1/8 |
| REFRIG. TYPE | R410A | R410A | R410A |
| REFRIG. QUANTITY (LBS) | 23.4 | 38.25 | 42.18 |
| MANUFACTURER | TRANE | TRANE | TRANE |
| TYPE | VRF | VRF | VRF |
| MODEL NUMBER | TUHYP0723A | TUHYP1683A | TUHYP1683A |
| SERVICE | BATTERY RM. | RADIO ROOM | RADIO ROOM |
| OPER. WT (LBS) | 500 | 750 | 750 |
| ACCESSORIES | 1 | 1 | 1 |

1. PROVIDE WITH DUCTED CONDENSER OUTLET. ADJUST CONDENSER FAN PRESSURE SETTING TO 0.32"W.C.

REGISTERED PROFESSIONAL ENGINEER
MICHAEL D. CANTRELL
No. M25568
Exp. 9-30-25
MECHANICAL
STATE OF CALIFORNIA

LAWRENCE ENGINEERING GROUP
4910 E. Clinton Way, Suite 101
(559) 431-0101
23069
Fresno, CA 93727
FAX (559) 431-1362

| | DATE | RECORD DRAWING | DATE |
|---|---|---|---|
| DESIGNED: | | RESIDENT ENGINEER | |
| DRAWN: | | | |
| CHECKED: | | | |

FOR RIGHT OF WAY DATA AND ACCURATE ACCESS DETERMINATION, SEE DOCUMENTS IN THE DEPARTMENT OF PUBLIC WORKS AND PLANNING.

SCALE
HORIZ 0 10' 20'
VERT 0 1' 2'

MECHANICAL SCHEDULES

PROJECT
DEPARTMENT OF INTERNAL SERVICES
REEDLEY RADIO TOWER EQUIPMENT SHELTER

THE COUNTY OF FRESNO

DEPARTMENT OF PUBLIC WORKS AND PLANNING

| M4.0 | 5 | 8 |
|---|---|---|
| DRAWING NO. | SHEET NO. | TOTAL |

**C1. COMPLIANCE SUMMARY**

| COMPLIES[3] | | | |
|---|---|---|---|
| | Time Dependent Valuaton (TDV) | | Source Energy Use |
| | Efficiency[1] (kBtu/ft$^2$ - yr) | Total[2] (kBtu/ft$^2$ - yr) | Total[2] (kBtu/ft$^2$ - yr) |
| Standard Design | 3746.91 | 3746.91 | 343.52 |
| Proposed Design | 2458.68 | 2458.68 | 196.92 |
| **Compliance Margins** | **1288.23** | **1288.23** | **146.6** |
| | **Pass** | **Pass** | **Pass** |

*[1] Efficiency measures include improvements like a better building envelope and more efficient equipment*
*[2] Compliance Totals include efficiency, photovoltaics and batteries*
*[3] Building complies when efficiency and total compliance margins are greater than or equal to zero and unmet load hour limits are not exceeded*





**B. PROJECT SUMMARY**

*Table B shows which building components are included in the performance calculation. If indicated as not included, the project must show compliance prescriptively if within the permit application.*

| Building Components Complying via Performance | | | | | | Building Components Complying Prescriptively | |
|---|---|---|---|---|---|---|---|
| Envelope (See Table G) | Nonres | Performance | Solar Thermal Water Heating (See Table I3) | ☐ | Performance | The following building components are ONLY eligible for prescriptive compliance and should be documented on the NRCC form listed if within the scope of the permit application (i.e. compliance will not be shown on the NRCC-PRF-E). | |
| | MultiFam | Not Included | | ☒ | Not Included | | |
| Mechanical (See Table H) | Nonres | Performance | Covered Process: Commercial Kitchens (see Table J) | ☐ | Performance | Indoor Lighting (Unconditioned) 140.6 & 170.2(e) | NRCC-LTI-E is required |
| | MultiFam | Not Included | | ☒ | Not Included | Outdoor Lighting 140.7 & 170.2(e) | NRCC-LTO-E is required |
| Domestic Hot Water (See Table I) | Nonres | Not Included | Covered Process: Laboratory Exhaust (see Table J) | ☐ | Performance | Sign Lighting 140.8 & 170.2(e) | NRCC-LTS-E is required |
| | MultiFam | Not Included | | ☒ | Not Included | **Building Components Complying with Mandatory Measures** | |
| Lighting (Indoor Conditioned, see Table K) | Nonres | Not Included | Photovoltaics (see Table F) | ☒ | Performance | Electrical power systems, commissioning, solar ready, elevator and escalator requirements are mandatory and should be documented on the NRCC form listed if applicable (i.e. compliance will not be shown on the NRCC-PRF-E.) | |
| | MultiFam | Not Included | | ☐ | Not Included | Electrical Power Distribution 110.11 | NRCC-ELC-E is required |
| | | | Battery (see Table F) | ☐ | Performance | Commissioning 120.8 | NRCC-CXR-E is required |
| | | | | ☒ | Not Included | Solar and Battery 110.10 | NRCC-SAB-E is required |





**Project Name:** Reedley Tower **Date Prepared:** 2024-06-12

**A. General Information**

| | | | | | |
|---|---|---|---|---|---|
| 1 | Project Name | Reedley Tower | | | |
| 2 | Run Title | Title 24 Analysis | | | |
| 3 | Project Location | 8606 S Rio Vista Ave | | | |
| 4 | City | Reedley | 5 | Standards Version | Compliance 2022 |
| 6 | Zip code | 93654 | 7 | Compliance Software (version) | EnergyPro 9.1 |
| 8 | Climate Zone | 13 | 9 | Building Orientation (deg) | 0 |
| 10 | Building Type(s) | • Nonresidential | 11 | Weather File | FRESNO-YOSEMITE_STYP20.epw |
| 12 | Project Scope | • New envelope and mechanical | 13 | Number of Dwelling Units | 0 |
| 14 | Total Conditioned Floor Area in Scope (ft$^2$) | 486.66 | 15 | Total # of hotel/motel rooms | 0 |
| 16 | Total Unconditioned Floor Area (ft$^2$) | 393 | 17 | Fuel Type | Natural gas |
| 18 | Nonresidential Conditioned Floor Area | 486.66 | 19 | Total # of Stories (Habitable Above Grade) | 1 |
| 20 | Residential Conditioned Floor Area | 0 | | | |





**C4. SOURCE ENERGY COMPLIANCE RESULTS FOR PERFORMANCE COMPONENTS (Annual SOURCE Energy Use, kBtu/ft$^2$ /yr)**

| COMPLIES[2] | | | |
|---|---|---|---|
| Energy Component | Standard Design (SOURCE) | Proposed Design (SOURCE) | Compliance Margin (SOURCE)[1] |
| Space Heating | 0 | 0 | 0 |
| Space Cooling | 87.69 | 103.49 | -15.8 |
| Indoor Fans | 252.34 | 89.94 | 162.4 |
| Heat Rejection | 0 | 0 | 0 |
| Pumps & Misc. | 0 | 0 | 0 |
| Domestic Hot Water | 1.75 | 1.75 | 0 |
| Indoor Lighting | 1.74 | 1.74 | 0 |
| Flexibility | --- | --- | --- |
| **EFFICIENCY COMPLIANCE TOTAL** | **343.52** | **196.92** | **146.6 (42.7%)** |
| Photovoltaics | --- | --- | --- |
| Batteries | --- | --- | --- |
| **TOTAL COMPLIANCE** | **343.52** | **196.92** | **146.6 (42.7%)** |

*[1] Notes: This number in parenthesis following the Compliance Margin in column 4, represents the Percent Better than Standard.*





**C3. TDV ENERGY RESULTS FOR NON-REGULATED COMPONENTS[1]**

| Non-Regulated Energy Component | Standard Design (TDV) | Proposed Design (TDV) | Compliance Margin (TDV)[1] |
|---|---|---|---|
| Receptacle | 372.71 | 372.71 | --- |
| Process | 5461.46 | 5461.46 | --- |
| Other Ltg | 18.13 | 18.13 | --- |
| Process Motors | --- | --- | --- |
| **TOTAL (TOTAL COMPLIANCE + NON-REGULATED COMPONENTS)** | **9599.21** | **8310.98** | **1288.23 (13.4%)** |

*[1] Notes: This table is not used for Energy Code Compliance.*





**C2. TDV ENERGY COMPLIANCE RESULTS FOR PERFORMANCE COMPONENTS (Annual TDV Energy Use, kBtu/ft$^2$ - yr)**

| COMPLIES[2] | | | |
|---|---|---|---|
| Energy Component | Standard Design (TDV) | Proposed Design (TDV) | Compliance Margin (TDV)[1] |
| Space Heating | 0.01 | 0 | 0.01 |
| Space Cooling | 1344.9 | 1472.61 | -127.71 |
| Indoor Fans | 2361.66 | 945.72 | 1415.94 |
| Heat Rejection | 0 | 0 | 0 |
| Pumps & Misc. | 0 | 0 | 0 |
| Domestic Hot Water | 17.89 | 17.9 | -0.01 |
| Indoor Lighting | 22.45 | 22.45 | 0 |
| Flexibility | --- | --- | --- |
| **EFFICIENCY COMPLIANCE TOTAL** | **3746.91** | **2458.68** | **1288.23 (34.4%)** |
| Photovoltaics | --- | --- | --- |
| Batteries | --- | --- | --- |
| **TOTAL COMPLIANCE** | **3746.91** | **2458.68** | **1288.23 (34.4%)** |

*[1] Notes: This number in parenthesis following the Compliance Margin in column 4, represents the Percent Better than Standard.*



REGISTERED PROFESSIONAL ENGINEER
MICHAEL D. CANELLI
No. M33668
Exp. 9-30-25
MECHANICAL
STATE OF CALIFORNIA

LAWRENCE ENGINEERING GROUP
4910 E. Clinton Way, Suite 101
(559) 431-0101
23069
Fresno, CA 93727
FAX (559) 431-1362

| | DATE | RECORD DRAWING | |
|---|---|---|---|
| DESIGNED: | | RESIDENT ENGINEER | DATE |
| DRAWN: | | | |
| CHECKED: | | | |

FOR RIGHT OF WAY DATA AND ACCURATE ACCESS DETERMINATION, SEE DOCUMENTS IN THE DEPARTMENT OF PUBLIC WORKS AND PLANNING.

SCALE
HORIZ 0 10' 20'
VERT 0 1' 2'

TITLE 24 DOCUMENTS

PROJECT
DEPARTMENT OF INTERNAL SERVICES
REEDLEY RADIO TOWER EQUIPMENT SHELTER

THE COUNTY OF FRESNO

DEPARTMENT OF PUBLIC WORKS AND PLANNING

| M5.0 | 6 | 8 |
|---|---|---|
| DRAWING NO. | SHEET NO. | TOTAL |

June 2024 4:44 PM p:\2023\23069 fresno county reedley tower hvac\4-drawings\4 M\M5.0-5.2 Title 24.dwg matthew

**C8. ENERGY USE INTENSITY (EUI)**

| | Standard Design (kBtu/ft² / yr) | Proposed Design (kBtu/ft² / yr) | Margin (kBtu/ft² / yr) | Margin Percentage |
|---|---|---|---|---|
| GROSS EUI[1] | 762.57 | 675.29 | 87.28 | 11.45 |
| NET EUI[1] | 762.57 | 675.29 | 87.28 | 11.45 |

[1] *Notes: Gross EUI is Energy Use Total (not including PV)/Total Building Area. Net EUI is Energy Use Total (including PV)/Total Building Area.*

**D1. EXCEPTIONAL CONDITIONS**

• The building does not include service water heating. Verify that service water heating is not required and is not included in the design.
• PV/Battery Building Type has been modified from software defaults for one or more spaces. Review project's PV/Battery Building Type(s) with documentation author. Refer to Energy Code section 140.10 for Nonresidential or 170.2(g) for more information.

**F1. REQUIRED PV SYSTEMS**

| 01 | 02 | 03 | 04 | 05 | 06 | 07 | 08 | 09 | 10 | 11 | 12 |
|---|---|---|---|---|---|---|---|---|---|---|---|
| DC System Size (kWdc) | Exception[1] | Module Type | Array Type | Power Electronics | CFI | Azimuth (deg) | Tilt Input | Array Angle (deg) | Tilt: (x in 12) | Inverter Eff. (%) | Annual Solar Access (%) |

[1]*See Table D1 for any PV exceptions used.*





**C7. ENERGY USE SUMMARY**

| Energy Component | Standard Design Site (MWh) | Proposed Design Site (MWh) | Margin (MWh) | Standard Design Site (MBtu) | Proposed Design Site (MBtu) | Margin (MBtu) |
|---|---|---|---|---|---|---|
| Space Heating | 0 | --- | --- | --- | --- | --- |
| Space Cooling | 25.9 | 28.1 | -2.2 | --- | --- | --- |
| Indoor Fans | 40.9 | 16.2 | 24.7 | --- | --- | --- |
| Heat Rejection | --- | --- | --- | --- | --- | --- |
| Pumps & Misc. | --- | --- | --- | --- | --- | --- |
| Domestic Hot Water | 0.3 | 0.3 | 0 | --- | --- | --- |
| Indoor Lighting | 0.4 | 0.4 | 0 | --- | --- | --- |
| Flexibility | --- | --- | --- | --- | --- | --- |
| **EFFICIENCY TOTAL** | **67.5** | **45** | **22.5** | **0** | **0** | **0** |
| Photovoltaics | --- | --- | --- | --- | --- | --- |
| Batteries | --- | --- | --- | --- | --- | --- |
| **ENERGY USE SUBTOTAL** | **67.5** | **45** | **22.5** | **0** | **0** | **0** |
| Receptacle | 7.5 | 7.5 | 0 | --- | --- | --- |
| Process | 121.2 | 121.2 | 0 | --- | --- | --- |
| Other Ltg | 0.4 | 0.4 | 0 | --- | --- | --- |
| Process Motors | --- | --- | --- | --- | --- | --- |
| **ENERGY USE TOTAL** | **196.6** | **174.1** | **22.5** | **0** | **0** | **0** |





**C5. SOURCE ENERGY RESULTS FOR NON-REGULATED COMPONENTS[1]**

| Non-Regulated Energy Component | Standard Design (SOURCE) | Proposed Design (SOURCE) | Compliance Margin (SOURCE)[1] |
|---|---|---|---|
| Receptacle | 27.29 | 27.29 | --- |
| Process | 370.02 | 370.02 | --- |
| Other Ltg | 1.41 | 1.41 | --- |
| Process Motors | --- | --- | --- |
| **TOTAL ( TOTAL COMPLIANCE + NON-REGULATED COMPONENTS)** | **742.24** | **595.64** | **146.6 (19.8%)** |

[1] *Notes: This table is not used for Energy Code Compliance.*

**C6. 'ABOVE CODE' QUALIFICATIONS**

☐ This project is pursuing CalGreen Tier 1 ☐ This project is pursuing CalGreen Tier 2





**G6A. OPAQUE DOOR SUMMARY (NONRESIDENTIAL)**

| 01 | 02 | 03 | 04 |
|---|---|---|---|
| Assembly Name | Area (ft²) | Overall U-factor | Status[1] |
| Metal Door18 | 28 | 0.7 | N |
| 10x8 Metal Louvers29 | 320 | 1.45 | N |

[1] *Status: N - New, A - Altered, E - Existing*

**H1. DRY SYSTEM EQUIPMENT (FURNACES, AIR HANDLING UNITS, HEAT PUMPS, VRF, ECONOMIZERS ETC.)**

| 01 | 02 | 03 | 04 | 05 | 06 | 07 | 08 | 09 | 10 | 11 | 12 |
|---|---|---|---|---|---|---|---|---|---|---|---|
| | | | Heating | | | | Cooling | | | | |
| Equipment Name | Equipment Type | Qty | Total Heating Output (kBtu/h) | Supp Heat Output (kBtu/h) | Efficiency Unit | Efficiency | Total Cooling Output (kBtu/h) | Efficiency Unit | Efficiency | Economizer Type (if present) | Status[1] |
| ODU 1 | Variable Refrigerant Flow | 1 | 80 | N/A | COP | 3.97 | 72 | EER | 13.1 | N/A | N |
| ODU 2 | Variable Refrigerant Flow | 1 | 188 | N/A | COP | 3.59 | 168 | EER | 11.5 | N/A | N |
| ODU 3 | Variable Refrigerant Flow | 1 | 188 | N/A | COP | 3.8 | 168 | EER | 11.5 | N/A | N |

[1] *Status: N - New, A - Altered, E - Existing*





**G4. NONRESIDENTIAL AIR BARRIER**

| 01 | 02 |
|---|---|
| Building Story Name | Air Barrier |
| Com-Floor 1 | No air barrier |

**G5. OPAQUE SURFACE ASSEMBLY SUMMARY**

| 01 | 02 | 03 | 04 | 05 | 06 | | 07 | 08 | 09 | 10 |
|---|---|---|---|---|---|---|---|---|---|---|
| | | | | | Continuous R-Value | | | | | |
| Surface Name | Construction Type | Area (ft²) | Framing Type | Cavity R-Value | Interior | Exterior | Units | Value | Description of Assembly Layers | Status[1] |
| 8 CMU Wall w/ polyiso7 | Exterior Wall | 1,222.54 | Metal | 0 | N/A | 18 | U-factor | 0.046 | Concrete - Part Grouted and Empty - 125 lb/ft3 - 8 in.<br>Air - Metal Wall Framing - 16 or 24 in. OC<br>Glass fiber batt - 5 1/2 in. R19 (CEC Default)<br>Gypsum Board - 1/2 in. | N |
| Slab On Grade11 | Underground Floor | 879.66 | N/A | 0 | N/A | N/A | F-factor | 0.73 | Slab Type =Unheated slab on grade<br>Insulation Orientation =None<br>Insulation R-Value =none | N |
| Metal Truss Roof13 | Roof | 879.66 | N/A | 0 | N/A | 23.47 | U-factor | 0.0376 | Metal Standing Seam - 1/16 in.<br>Cellular polyisocyanurate (unfaced) - 4 in. R23<br>Vapor permeable felt - 1/8 in.<br>Plywood - 5/8 in.<br>Air - Cavity - Wall Roof Ceiling - 4 in. or more<br>Gypsum Board - 5/8 in. | N |
| 8 CMU Wall26 | Exterior Wall | 1,077.25 | N/A | 0 | N/A | N/A | U-factor | 0.3794 | Concrete - Part Grouted and Empty - 125 lb/ft3 - 8 in. | N |

[1] *Status: N - New, A - Altered, E - Existing*





**F1B. PV BATTERY BUILDING TYPE(S)**

| 01 | 02 | 03 |
|---|---|---|
| Building Occupancy Type* (From Table 140.10-A/B and 170.2-U/V) | Conditioned Floor Area (ft²) | Unconditioned Floor Area (ft²) |
| Grocery | 0 | 0 |
| High-Rise Multifamily | 0 | 0 |
| Office, Financial Institutions, Unleased Tenant Space | 0 | 0 |
| Retail | 0 | 0 |
| School | 0 | 0 |
| Warehouse | 0 | 0 |
| Auditorium, Convention Center, Hotel/Motel, Library, Medical Office Building/Clinic, Restaurant, Theater | 0 | 0 |
| None | 486.66 | 393 |

**Building Occupancy Types are defined in Section 100.1 of the Energy Code*

**G1. ENVELOPE GENERAL INFORMATION (conditioned spaces only)**

| 01 | 02 | 03 | 04 |
|---|---|---|---|
| Opaque Surfaces & Orientation | Total Gross Surface Area (ft²) | Total Fenestration Area (ft²) | Window to Wall Ratio (%) |
| North-Facing[1] | 269.28 | 0 | 0 |
| East-Facing[2] | 520.38 | 0 | 0 |
| South-Facing[3] | 0 | 0 | 0 |
| West-Facing[4] | 432.88 | 0 | 0 |
| **Total** | **1222.54** | **0** | **0** |
| Roof | 486.66 | 0 | 0 |

*Notes*
*[1]North-Facing is oriented to within 45 degrees of true north, including 45 00'00" east of north (NE), but excluding 45 00'00" west of north (NW),*
*[2]East-Facing is oriented to within 45 degrees of true east, including 45 00'00" south of east (SE), but excluding 45 00'00" north of east (NE),*
*[3]South-Facing is oriented to within 45 degrees of true south, including 45 00'00" west of south (SW), but excluding 45 00'00" east of south (SE),*
*[4]West-Facing is oriented to within 45 degrees of true west, including 45 00'00" north of west (NW), but excluding 45 00'00" south of west (SW),*



REGISTERED PROFESSIONAL ENGINEER
MICHAEL D. CANFIELD
No. M33668
Exp. 9-30-25
MECHANICAL
STATE OF CALIFORNIA

LAWRENCE ENGINEERING GROUP
4910 E. Clinton Way, Suite 101
(559) 431-0101
23069
Fresno, CA 93727
FAX (559) 431-1362

| | DATE | RECORD DRAWING | DATE |
|---|---|---|---|
| DESIGNED: | | RESIDENT ENGINEER | |
| DRAWN: | | | |
| CHECKED: | | | |

FOR RIGHT OF WAY DATA AND ACCURATE ACCESS DETERMINATION, SEE DOCUMENTS IN THE DEPARTMENT OF PUBLIC WORKS AND PLANNING.

SCALE
HORIZ 0 10' 20'
VERT 0 1' 2'

*TITLE 24 DOCUMENTS*

PROJECT
DEPARTMENT OF INTERNAL SERVICES
REEDLEY RADIO TOWER EQUIPMENT SHELTER

THE COUNTY OF FRESNO

DEPARTMENT OF PUBLIC WORKS AND PLANNING

| M5.1 | 7 | 8 |
|---|---|---|
| DRAWING NO. | SHEET NO. | TOTAL |

**H3. NONRESIDENTIAL / COMMON USE AREA FAN SYSTEMS SUMMARY**

| 01 | 02 | 03 | 04 | 05 | 06 | 07 | 08 | 09 | 10 | 11 | 12 | 13 |
|---|---|---|---|---|---|---|---|---|---|---|---|---|
| Name or Item Tag | Qty | Design OA CFM | Supply Fan | | | | Return / Relief Fan | | | | | Status[1] |
| | | | CFM | Power | Power Units | Control | Fan Type | CFM | Power | Power Units | Control | |
| 2-Zone 1 : Battery Room-VRF | 2 | 0 | 920 | 0.08 | BHP | Constant Vol | N/A | N/A | N/A | N/A | N/A | N |
| 3-Zone 2 : Radio IT Room-VRF | 2 | 0 | 2,507 | 0.94 | BHP | Constant Vol | N/A | N/A | N/A | N/A | N/A | N |
| 4-Zone 3 : Radio IT Room-VRF | 6 | 0 | 920 | 0.08 | BHP | Constant Vol | N/A | N/A | N/A | N/A | N/A | N |

[1] *Status: N - New, A - Altered, E - Existing*

**H5. GENERAL EXHAUST FAN SUMMARY**

| 01 | 02 | 03 | 04 | 05 | 06 | 07 | 08 |
|---|---|---|---|---|---|---|---|
| System ID | Zone Name | Qty | CFM | Power | Power Units | Continuous Operation? | Status[1] |
| Zone 1 : Battery Room1 | 1-Zone 1 : Battery Room | 1 | 1200 | 0.7 | BHP | No | N |
| Zone 2 : Radio IT Room14 | 2-Zone 2 : Radio IT Room | 1 | 275 | 0.02 | BHP | No | N |

[1] *Status: N - New, A - Altered, E - Existing*

**H9. NONRESIDENTIAL / COMMON USE AREA & HOTEL/MOTEL VENTILATION**

| 01 | 02 | 03 | 04 | 05 | 06 | 07 |
|---|---|---|---|---|---|---|
| Zone Name | Mechanical Ventilation | | | | Conditioned Area (sf) | DCV or Occupant Sensor Controls, or Both |
| | Ventilation Function | # of People | Supply OA CFM | Exhaust CFM | | |
| 1-Zone 1 : Battery Room | General - Unoccupied | 0.24 | 0 | 1200 | 162.66 | N/A |
| 2-Zone 2 : Radio IT Room | General - Unoccupied | 0.24 | 0 | 275 | 162 | N/A |





**H9. NONRESIDENTIAL / COMMON USE AREA & HOTEL/MOTEL VENTILATION**

| 01 | 02 | 03 | 04 | 05 | 06 | 07 |
|---|---|---|---|---|---|---|
| Zone Name | Mechanical Ventilation | | | | Conditioned Area (sf) | DCV or Occupant Sensor Controls, or Both |
| | Ventilation Function | # of People | Supply OA CFM | Exhaust CFM | | |
| 3-Zone 3 : Radio IT Room | General - Unoccupied | 0.24 | 0 | 0 | 162 | N/A |

**H11. ZONAL SYSTEM AND TERMINAL UNIT SUMMARY**

| 01 | 02 | 03 | 04 | 05 | 06 | 07 | 08 | 09 | 10 | 11 | 12 |
|---|---|---|---|---|---|---|---|---|---|---|---|
| System ID | System Type | Qty | Rated Capacity (kBtuh) | | Airflow (cfm) | | | Fan | | | VSD |
| | | | Heating | Cooling | Design | Min. | Min. Ratio | Power | Power Units | Cycles | |
| 2-Zone 1 : Battery Room-VRF | Variable Refrigerant Flow | 2 | 22.7 | 26.4 | 920 | N/A | N/A | 0.08 | BHP | Continuous | ☐ |
| 3-Zone 2 : Radio IT Room-VRF | Variable Refrigerant Flow | 2 | 108 | 96 | 2,507 | N/A | N/A | 0.94 | BHP | Continuous | ☐ |
| 4-Zone 3 : Radio IT Room-VRF | Variable Refrigerant Flow | 6 | 22.7 | 30 | 920 | N/A | N/A | 0.08 | BHP | Continuous | ☐ |

**L. DECLARATION OF REQUIRED CERTIFICATES OF INSTALLATION**

**Selections made by Documentation Author indicate which Certificates of Installation must be submitted for the features to be recognized for compliance. These documents must be retained and provided to the building inspector during construction and can be found online**

| Building Component | Form/Title |
|---|---|
| Envelope | NRCI-ENV-01-E - Must be submitted for all buildings |
| Envelope | NRCI-ENV-E - Envelope (for all buildings) |
| Mechanical | NRCI-MCH-01-E - Must be submitted for all buildings |
| Mechanical | NRCI-MCH-E - For all buildings with Mechanical Systems |





**M. DECLARATION OF REQUIRED CERTIFICATES OF ACCEPTANCE**

**Selections made by Documentation Author indicate which Certificates of Acceptance must be submitted for the features to be recognized for compliance. These documents must be provided to the building inspector during construction and must be completed through an Acceptance Test Technician Certification Provider (ATTCP).**

**There are no Certificates of Acceptance applicable to this project**

**N. DECLARATION OF REQUIRED CERTIFICATES OF VERIFICATION**

**Selections made by Documentation Author indicate which Certificates of Verification must be submitted for the features to be recognized for compliance. These documents must be retained and provided to the building inspector during construction and can be found online**

**There are no Certificates of Verification applicable to this project**





**Documentation Author's Declaration Statement**

**1. I certify that this Certificate of Compliance documentation is accurate and complete.**

| | |
|---|---|
| Documentation Author Name: Natalie Maciel | Documentation Author Signature: Natalie Maciel |
| Company: Lawrence Engineering Group | Signature Date: 2024-06-12 |
| Address: 4910 E. Clinton Way Suite 101 | CEA/HERS Certification Identification (if applicable): |
| City/State/Zip: Fresno , California 93727 | Phone: (559) 431-0101 |

**Responsible Person's Declaration statement**

**I certify the following under penalty of perjury, under the laws of the State of California:**

1. The information provided on this Certificate of Compliance is true and correct.
2. I am eligible under Division 3 of the Business and Professions Code to accept responsibility for the building design or system design identified on this Certificate of Compliance (responsible designer)
3. The energy features and performance specifications, materials, components, and manufactured devices for the building design or system design identified on this Certificate of Compliance conform to the requirements of Title 24, Part 1 and Part 6 of the California Code of Regulations.
4. The building design features or system design features identified on this Certificate of Compliance are consistent with the information provided on other applicable compliance documents, worksheets, calculations, plans and specifications submitted to the enforcement agency for approval with this building permit application.
5. I understand that a registered copy of this Certificate of Compliance shall be made available with the building permit(s) issued for the building, and made available to the enforcement agency for all applicable inspections, and I will take the necessary steps to accomplish this requirement.
6. I understand that a registered copy of this Certificate of Compliance is required to be included with the documentation the builder provides to the building owner at occupancy, and I will take the necessary steps to accomplish these requirements.

| | | |
|---|---|---|
| Responsible Designer Name: Joseph C. Harrell | Responsible Designer Signature: | |
| Company: Fresno County | | |
| Address: 2220 Tulare Street | Date Signed: | |
| City/State/Zip: Fresno, CA 93721 | License #: C80424 | |
| Phone: (559) 600-4534 | Title: | Scope: |
| Responsible Designer Name: Michael D. Cantelmi | Responsible Designer Signature: | |
| Company: Lawrence Engineering Group | | |
| Address: 4910 E. Clinton Ave. Suite 101 | Date Signed: 2024-06-12 | |
| City/State/Zip: Fresno, CA 93727 | License #: M23588 | |
| Phone: (559) 431-0101 | Title: | Scope: |



REGISTERED PROFESSIONAL ENGINEER
MICHAEL D. CANTELMI
No. M23588
Exp. 9-30-25
MECHANICAL
STATE OF CALIFORNIA

LAWRENCE ENGINEERING GROUP
4910 E. Clinton Way, Suite 101
(559) 431-0101
23069
Fresno, CA 93727
FAX (559) 431-1342

| | DATE | RECORD DRAWING | DATE |
|---|---|---|---|
| DESIGNED: | | RESIDENT ENGINEER | |
| DRAWN: | | | |
| CHECKED: | | | |

FOR RIGHT OF WAY DATA AND ACCURATE ACCESS DETERMINATION, SEE DOCUMENTS IN THE DEPARTMENT OF PUBLIC WORKS AND PLANNING.

SCALE
HORIZ 0 10' 20'
VERT 0 1' 2'

TITLE 24 DOCUMENTS

PROJECT
DEPARTMENT OF INTERNAL SERVICES
REEDLEY RADIO TOWER EQUIPMENT SHELTER

THE COUNTY OF FRESNO

DEPARTMENT OF PUBLIC WORKS AND PLANNING

| M5.2 | 8 | 8 |
|---|---|---|
| DRAWING NO. | SHEET NO. | TOTAL |

12 June 2024 5:02 PM p:\2023\23969 fresno county reedley tower hvac\4-drawings\4 M\M5.0-5.2 Title 24.dwg mathew